GR5525 Hardware Design Guidelines

Version: 1.1

Release Date: 2024-03-29

Shenzhen Goodix Technology Co., Ltd.

Copyright © 2024 Shenzhen Goodix Technology Co., Ltd. All rights reserved.

Any excerption, backup, modification, translation, transmission or commercial use of this document or any portion of this document, in any form or by any means, without the prior written consent of Shenzhen Goodix Technology Co., Ltd. is prohibited.

Trademarks and Permissions

GOODIX and other Goodix trademarks are trademarks of Shenzhen Goodix Technology Co., Ltd. All other trademarks and trade names mentioned in this document are the property of their respective holders.

Disclaimer

Information contained in this document is intended for your convenience only and is subject to change without prior notice. It is your responsibility to ensure its application complies with technical specifications.

Shenzhen Goodix Technology Co., Ltd. (hereafter referred to as “Goodix”) makes no representation or guarantee for this information, express or implied, oral or written, statutory or otherwise, including but not limited to representation or guarantee for its application, quality, performance, merchantability or fitness for a particular purpose. Goodix shall assume no responsibility for this information and relevant consequences arising out of the use of such information.

Without written consent of Goodix, it is prohibited to use Goodix products as critical components in any life support system. Under the protection of Goodix intellectual property rights, no license may be transferred implicitly or by any other means.

Shenzhen Goodix Technology Co., Ltd.

Headquarters: Floor 12-13, Phase B, Tengfei Industrial Building, Futian Free Trade Zone, Shenzhen, China

TEL: +86-755-33338828 Zip Code: 518000

Website: www.goodix.com

Preface

Purpose

This document is to present the necessary circuit required for proper operation of GR5525 Bluetooth System-on-Chips (SoCs). Recommended chip interfaces, peripherals, schematic diagram, and PCB layout guidelines of the GR5525 SoC family are provided.

This *Hardware Design Guidelines* intends to help system designers build minimal Bluetooth Low Energy (Bluetooth LE) hardware circuits and develop products.

Audience

This document is intended for:

- GR5525 user
- Bluetooth product engineer
- Bluetooth LE system designer
- Hardware engineer

Release Notes

This document is the second release of *GR5525 Hardware Design Guidelines*, corresponding to GR5525 SoC series.

Revision History

Version	Date	Description
1.0	2023-09-20	Initial release
1.1	2024-03-29	Optimized some descriptions.

Copyright © 2024 Shenzhen Goodix Technology Co., Ltd.

Contents

Preface I

1 Product Overview 1

1.1 Features 1

1.2 Block Diagram 4

2 Pinout 5

2.1 QFN68 5

2.2 QFN56 (With Flash) 8

2.3 QFN56 (Without Flash) 11

3 Minimal Design for GR5525 SoC 15

3.1 Schematic Design Guideline 15

3.1.1 Power Supply 15

3.1.1.1 Introduction 15

3.1.1.2 Power-on Sequence 16

3.1.1.3 I/O LDO 19

3.1.1.4 Power Supply Scheme 20

3.1.2 Clock 22

3.1.2.1 Introduction 22

3.1.2.2 32 MHz Clock (XO) 22

3.1.2.3 32.768 kHz Clock 23

3.1.3 RF 24

3.1.3.1 Introduction 24

3.1.3.2 RF Scheme 25

3.1.4 I/O Pins 26

3.1.5 SWD Interfaces 27

3.1.6 Flash 27

3.2 PCB Design and Layout Guideline 29

3.2.1 PCB Layer Stackup 29

3.2.2 Components Layout 30

3.2.3 Power Supply 30

3.2.3.1 DC-DC Switching Regulator 30

3.2.3.2 RF Input Power Supply 31

3.2.3.3 Digital and Analog Power Supply 31

3.2.4 Clock 32

3.2.5 RF Port 33

3.2.6 Grounding 34

3.3 ESD Protection Design 34

3.3.1 System-level ESD Design 34

3.3.1.1 ESD Schematic Design 34

Copyright © 2024 Shenzhen Goodix Technology Co., Ltd.

3.3.1.2 PCB Layout Design..... 37
3.3.1.3 Product Structural Design..... 40
3.3.2 ESD Considerations in Production, Transport, and Debugging..... 40

4 Reference Design..... 41

4.1 Reference Schematic Diagram..... 41
4.2 PCB Layout Reference Design..... 44
4.2.1 Four-layer PCBs..... 44
4.2.2 Two-layer PCBs..... 47
4.2.3 External Flash Connection for GR5525I0NI..... 48

5 FAQ..... 49

5.1 Why Is the Power Consumption in GR5525 Sleep Modes High?..... 49
5.2 Can the RF Matching Circuits Be Simplified or Removed?..... 49

6 Glossary..... 51

7 Appendix: QFN Assembly Guideline..... 52

7.1 Package Information..... 53
7.1.1 QFN68..... 53
7.1.2 QFN56..... 55
7.2 Board Mounting Guideline..... 57
7.2.1 Stencil Design for Perimeter Pads..... 57
7.2.2 Via Types and Solder Voiding..... 58
7.2.2.1 Stencil Thickness and Solder Paste..... 58
7.2.2.2 PCB Materials..... 59
7.2.3 SMT Printing Process..... 59
7.3 SMT Reflow Process..... 59
7.4 Rework Guideline..... 62
7.4.1 Component Removal..... 62
7.4.2 Site Redress..... 62
7.4.3 Solder Paste Printing..... 63
7.4.4 Component Placement..... 63
7.4.5 Component Attachment..... 63
7.5 RoHS Compliant..... 63
7.6 SVHC Materials (REACH)..... 63
7.7 Halogen Free..... 63

Copyright © 2024 Shenzhen Goodix Technology Co., Ltd.

1 Product Overview

The Goodix GR5525 series is a single-mode, low-power Bluetooth 5.3 System-on-Chip (SoC). It can be configured as a Broadcaster, an Observer, a Central, and a Peripheral and supports the combination of all the above roles, making it an ideal choice for Internet of Things (IoT) and smart wearable devices. In addition, it supports Bluetooth Low Energy (Bluetooth LE) direction finding: angle of arrival (AoA) and angle of departure (AoD).

Based on Arm® Cortex®-M4F CPU core running at 96 MHz, the GR5525 integrates a 2.4 GHz RF transceiver, Bluetooth LE 5.3 protocol stack, on-chip programmable Flash memory, 256 KB system SRAM, and a rich set of peripherals, enhanced I2C/UART port number for sensor applications, as well as expanded I/O functionality. The GR5525 MCU enhances QSPI interface to support external RAM (PSRAM) to accommodate display while still leaving plenty of space for wearable schemes.

GR5525 series are offered in both QFN68 and QFN56 packages. The table below lists the detailed package configurations.

Table 1-1 GR5525 series

Part Number	GR5525RGNI	GR5525IGNI	GR5525IENI	GR5525I0NI
CPU	Cortex®-M4F	Cortex®-M4F	Cortex®-M4F	Cortex®-M4F
RAM	256 KB	256 KB	256 KB	256 KB
SiP Flash	1 MB	1 MB	512 KB	N/A
I/O number	50	39	39	39
I/O voltage	1.8 V–3.6 V	1.8 V–3.6 V	1.8 V–3.6 V	In line with Flash voltage
Package (mm)	QFN68 (7.0 x 7.0 x 0.85)	QFN56 (7.0 x 7.0 x 0.75)	QFN56 (7.0 x 7.0 x 0.75)	QFN56 (7.0 x 7.0 x 0.75)

1.1 Features

- Bluetooth LE 5.3 transceiver
  - Supported data rates: 1 Mbps, 2 Mbps, and Long Range (500 kbps, 125 kbps)
  - AoA and AoD direction finding
  - TX power: –20 dBm to +7 dBm
  - RX sensitivity
    - –97 dBm sensitivity @ 1 Mbps mode
    - –93 dBm sensitivity @ 2 Mbps mode
    - –101 dBm sensitivity @ Long Range 500 kbps mode
    - –103 dBm sensitivity @ Long Range 125 kbps mode
  - Power consumption at 3.3 V VBAT input:
    - 6.3 mA TX current @ 0 dBm output power (64 MHz system clock)

Copyright © 2024 Shenzhen Goodix Technology Co., Ltd.

- 5.3 mA RX current @ 1 Mbps (64 MHz system clock)

- Arm® Cortex®-M4F 32-bit micro-processor with floating point support
  - Up to 96 MHz clock frequency
  - Built-in Memory Protection Unit (MPU) supporting eight programmable regions
  - Hardware Floating Point Unit (FPU)
  - Built-in Nested Vectored Interrupt Controller (NVIC)
  - Non-maskable Interrupt (NMI) input
  - Serial Wire Debug (SWD) with 16 breakpoints, two watchpoints, and a debug timestamp counter
  - 56 µA/MHz CoreMark running from Flash @ 3.3 V, 64 MHz from HFXO
- On-chip memory
  - 256 KB RAM data memory with retention capabilities
  - 8 KB cache RAM instruction memory with retention capabilities
  - Stack ROM (including boot ROM and Bluetooth LE Stack)
  - 1 MB internal QSPI Flash (512 KB for GR5525IENI, and external Flash for GR5525I0NI)
- Digital peripherals
  - 2 x general-purpose DMA engines with six channels and up to 16 programmable request/trigger sources
- Analog peripherals
  - 1 x 13-bit Sense ADC with sampling rate of 1 Msps, supporting up to eight external I/O channels and three internal signal channels
  - Built-in die temperature and voltage sensors
  - Low-power comparator, supporting wakeup from sleep mode
- Flexible serial peripherals
  - 4 x UART modules up to 2 Mbps with flow control and IrDA features
  - 4 x I2C modules for peripheral communication, up to 3.4 MHz, operating as either Master or Slave
  - 2 x I2S interfaces (1 x I2S master interface and 1 x I2S slave interface)
  - PDM interface with hardware sampling rate converter
  - 1 x 8-bit/16-bit/32-bit SPI master interface and 1 x SPI slave interface for host communication
  - 1 x Dual-lane SPI (DSPI) interface for display, with MIPI DBI Type-C support
  - 3 x Quad SPI (QSPI) interfaces, up to 48 MHz; supporting direct access via memory mapping when connecting with external NOR Flash
- Security

Copyright © 2024 Shenzhen Goodix Technology Co., Ltd.

- Complete secure computing engine:
  - AES 128-bit/192-bit/256-bit symmetric encryption (ECB, CBC)
  - Hash-based Message Authentication Code (HMAC-SHA256)
  - Public key cryptography (PKC)
  - True random number generator (TRNG)
- Comprehensive security operation mechanism:
  - Secure boot
  - Encrypted firmware running directly from Flash
  - eFuse for encrypted key storage
  - Differentiate application data key and firmware key, supporting one data key per device/product

- I/O peripherals
  - Up to 50 multiplexed I/O pins in total
    - Up to 34 general-purpose I/O (GPIO) pins with configurable pull-up/pull-down resistors
    - Up to eight always-on I/O (AON I/O) pins, supporting wakeup from sleep mode
    - Up to eight mixed signal I/O (MSIO) pins, configurable to be digital/analog signal interfaces
- Timers
  - 2 x 32-bit general-purpose timers
  - 1 x dual timer with two programmable 32-bit or 16-bit down counters
  - 1 x sleep timer for waking the device up from sleep mode
  - 2 x 3-channel PWMs with edge-aligned and center-aligned modes
  - 2 x real-time counters (1 x Calendar, 1 x real-time counter)
- Power management
  - On-chip DC-DC to provide RF analog voltage and supply core LDO
  - On-chip I/O LDO to provide I/O voltage and supply external components
  - Programmable thresholds for brownout detector (BOD)
  - Supply voltage: 2.4 V–3.8 V
  - I/O voltage: 1.8 V–3.6 V
- Low-power consumption
  - Sleep mode: 7.3 µA (Typical) at 3.3 V VBAT input, wakeup sources from always-on domain, and LFXO_32K running

Copyright © 2024 Shenzhen Goodix Technology Co., Ltd.

- Ultra deep sleep mode: 5.0 µA (Typical), with no memory data in retention and wakeup sources from SLP Timer or AON I/Os
- OFF mode: 200 nA (Typical), with system in reset mode

- Operating temperature range: –40°C to +85°C
- Packages
  - QFN68: 7.0 x 7.0 x 0.85 mm, 0.35 mm pitch
  - QFN56: 7.0 x 7.0 x 0.75 mm, 0.4 mm pitch

1.2 Block Diagram

The block diagram of GR5525 is shown in the figure below.

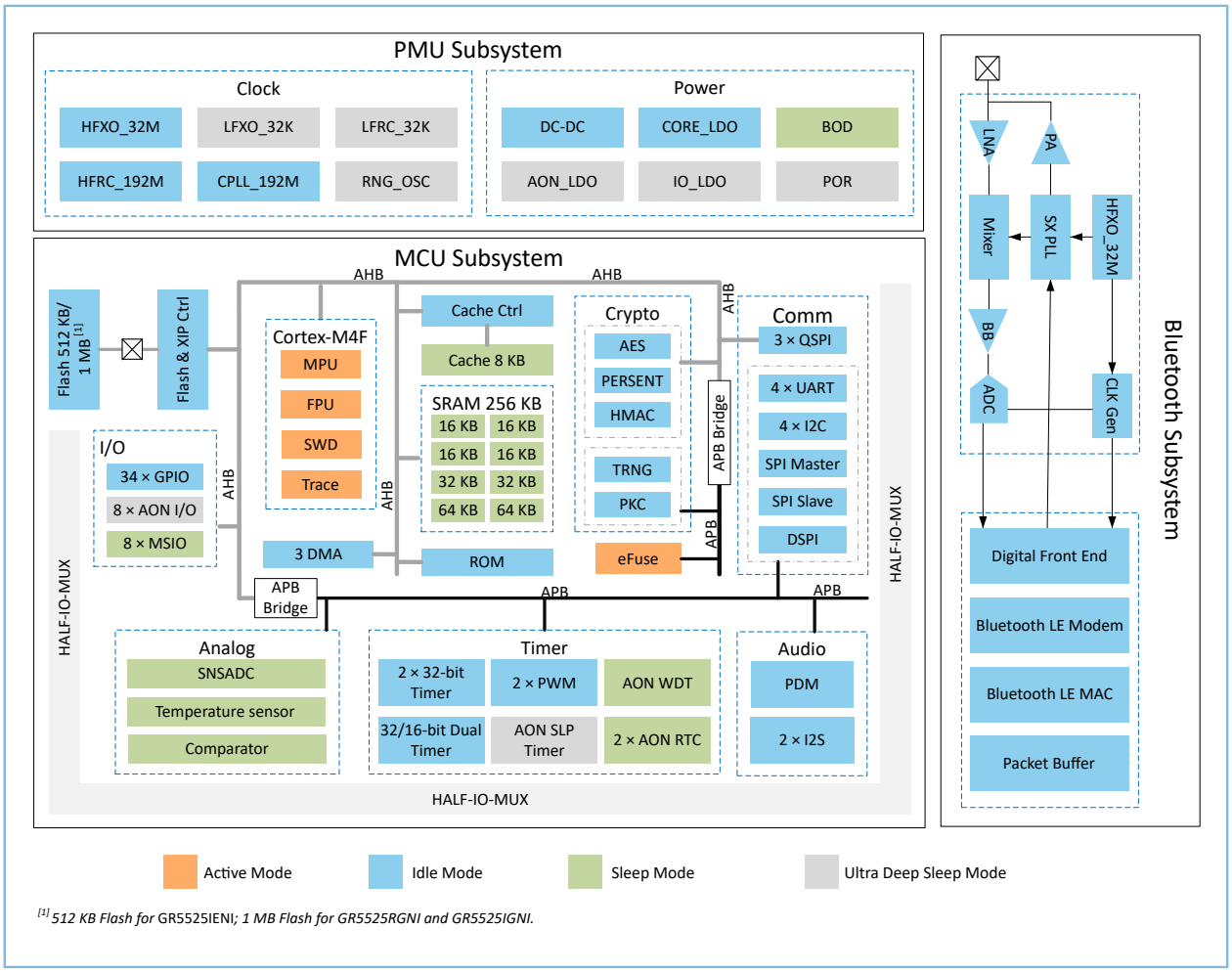

Figure 1-1 GR5525 block diagram

Note:

For more details of each module in this block diagram, see *GR5525 Datasheet*.

Copyright © 2024 Shenzhen Goodix Technology Co., Ltd.

2 Pinout

This chapter describes the pin assignment of the device and provides detailed information for each individual pin.

2.1 QFN68

The figure below shows the pin assignment for devices in QFN68 package.

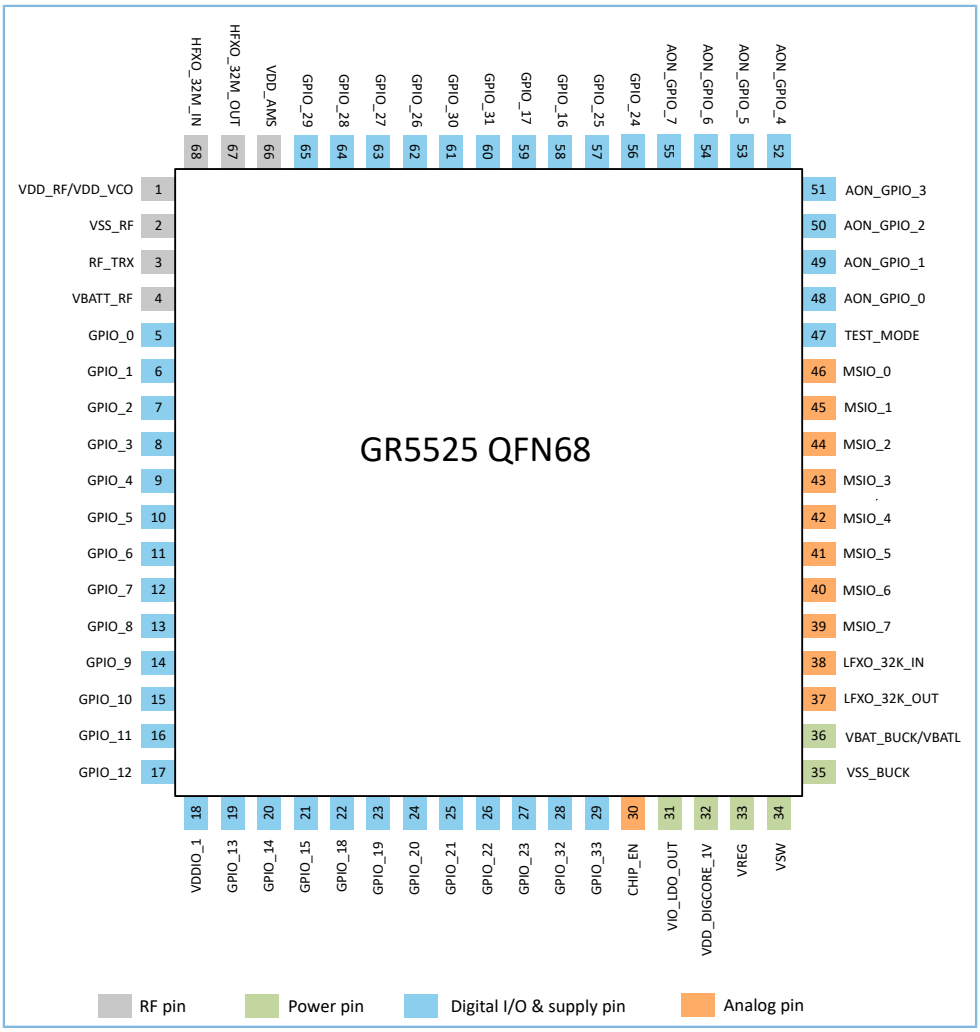

Figure 2-1 QFN68 pinout from top view

The following table provides the descriptions of pin functionality.

Table 2-1 Pin description

Pin #	Pin Name	Pin Type	Description/Default Function	Voltage Domain
1	VDD_RF/VDD_VCO	Analog/RF supply	Synthesizer VCO supply/RF supply: 1.1 V; connect to VREG	
2	VSS_RF	Analog/RF	RF GND; connect to GND	
3	RF_TRX	Analog/RF	RF transceiver RX input and TX output	
4	VBATT_RF	Analog/RF Supply	RF SPA and Bandgap supply; connect to VBATL	

Copyright © 2024 Shenzhen Goodix Technology Co., Ltd.

Pin #	Pin Name	Pin Type	Description/Default Function	Voltage Domain
5	GPIO_0	Digital I/O	General purpose I/O; default: SWD_CLK	VDDIO1
6	GPIO_1	Digital I/O	General purpose I/O; default: SWD_IO	
7	GPIO_2	Digital I/O	General purpose I/O, configurable to be an SWO interface	
8	GPIO_3	Digital I/O	General purpose I/O	
9	GPIO_4	Digital I/O		
10	GPIO_5	Digital I/O		
11	GPIO_6	Digital I/O		
12	GPIO_7	Digital I/O		
13	GPIO_8	Digital I/O		
14	GPIO_9	Digital I/O		
15	GPIO_10	Digital I/O		
16	GPIO_11	Digital I/O		
17	GPIO_12	Digital I/O		
18	VDDIO_1	Digital I/O supply	Digital I/O supply input. Support external 1.8 V–3.3 V input voltage.	
19	GPIO_13	Digital I/O	General purpose I/O	
20	GPIO_14	Digital I/O		
21	GPIO_15	Digital I/O		
22	GPIO_18	Digital I/O		
23	GPIO_19	Digital I/O		
24	GPIO_20	Digital I/O		
25	GPIO_21	Digital I/O		
26	GPIO_22	Digital I/O		
27	GPIO_23	Digital I/O		
28	GPIO_32	Digital I/O		
29	GPIO_33	Digital I/O		
30	CHIP_EN	Analog/PMU	Master Enable for chip reset pin. The high level of CHIP_EN equals VBATL. Minimum value of high level for CHIP_EN: 1 V	
31	VIO_LDO_OUT	PMU	Output of on-chip I/O supply regulator, connect internally to VDDIO0. Typical output: 1.8 V	VDDIO0
32	VDD_DIGCORE_1V	Analog/PMU	On-chip LDO output for digital core	
33	VREG	Analog/PMU	DC-DC feedback pin of switch regulator	

Copyright © 2024 Shenzhen Goodix Technology Co., Ltd.

Pin #	Pin Name	Pin Type	Description/Default Function	Voltage Domain
34	VSW	Analog/PMU	DC-DC converter switching node	
35	VSS_BUCK	Analog/PMU	DC-DC converter power GND	
36	VBAT_BUCK/VBATL	Analog/PMU	Power supply: 2.4 V to 3.8 V	
37	LFXO_32K_OUT	PMU	Output of inverting amplifier connected to 32.768 kHz crystal	
38	LFXO_32K_IN	PMU	Input of inverting amplifier connected to 32.768 kHz crystal	
39	MSIO_7	Mixed Signal I/O	Configurable mixed-signal I/O with digital I/O and analog I/O	VBATL
40	MSIO_6	Mixed Signal I/O		
41	MSIO_5	Mixed Signal I/O		
42	MSIO_4	Mixed Signal I/O		
43	MSIO_3	Mixed Signal I/O		
44	MSIO_2	Mixed Signal I/O		
45	MSIO_1	Mixed Signal I/O		
46	MSIO0	Mixed Signal I/O		
47	TEST_MODE	Analog/RF	Input pin, used for factory test mode selection • 1: factory test mode • 0: normal operation mode **Note:** In practice, the value is set to 0 and the pin is connected to GND by default.	
48	AON_GPIO_0	Digital I/O	Always-on GPIO; can wake up chip from sleep modes	VDDIO0
49	AON_GPIO_1	Digital I/O		
50	AON_GPIO_2	Digital I/O		
51	AON_GPIO_3	Digital I/O		
52	AON_GPIO_4	Digital I/O		
53	AON_GPIO_5	Digital I/O		
54	AON_GPIO_6	Digital I/O		
55	AON_GPIO_7	Digital I/O		
56	GPIO_24	Digital I/O	General purpose I/O	
57	GPIO_25	Digital I/O		
58	GPIO_16	Digital I/O		
59	GPIO_17	Digital I/O		
60	GPIO_31	Digital I/O		
61	GPIO_30	Digital I/O		
62	GPIO_26	Digital I/O		

Copyright © 2024 Shenzhen Goodix Technology Co., Ltd.

Pin #	Pin Name	Pin Type	Description/Default Function	Voltage Domain
63	GPIO_27	Digital I/O		
64	GPIO_28	Digital I/O		
65	GPIO_29	Digital I/O		
66	VDD_AMS	Analog/RF	AMS supply: 1.1 V. Connect to VREG.	
67	HFXO_32M_OUT	Analog/RF	Output of inverting amplifier connected to 32 MHz crystal	
68	HFXO_32M_IN	Analog/RF	Input of inverting amplifier connected to 32 MHz crystal	

Note:

- The pad drive strength for GPIO and AON_GPIO pins can be configured to 4 mA under 3.3 V voltage.
- The pad drive strength for MSIO pins can be configured to 2 mA under 3.3 V voltage.

2.2 QFN56 (With Flash)

The figure below shows the pin assignment for devices in QFN56 package (with Flash).

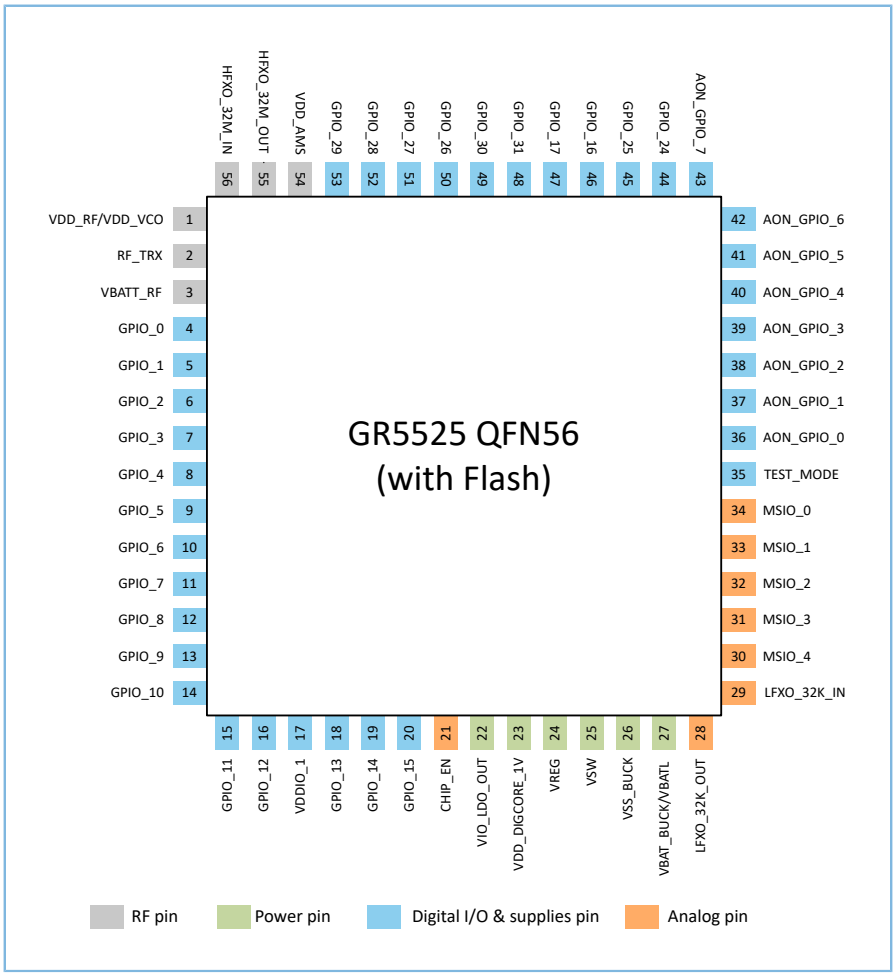

Figure 2-2 QFN56 (with Flash) pinout from top view

The following table provides the descriptions of pin functionality.

Table 2-2 Pin description

Pin #	Pin Name	Pin Type	Description/Default Function	Voltage Domain
1	VDD_RF/VDD_VCO	Analog/RF supply	Synthesizer VCO supply/RF supply: 1.1 V; connect to VREG	
2	RF_TRX	Analog/RF	RF transceiver RX input and TX output	
3	VBATT_RF	Analog/RF Supply	RF SPA and Bandgap supply; connect to VBATL	
4	GPIO_0	Digital I/O	General purpose I/O; default: SWD_CLK	VDDIO1
5	GPIO_1	Digital I/O	General purpose I/O; default: SWD_IO	
6	GPIO_2	Digital I/O	General purpose I/O	
7	GPIO_3	Digital I/O		
8	GPIO_4	Digital I/O		
9	GPIO_5	Digital I/O		
10	GPIO_6	Digital I/O		
11	GPIO_7	Digital I/O		
12	GPIO_8	Digital I/O		
13	GPIO_9	Digital I/O		
14	GPIO_10	Digital I/O		
15	GPIO_11	Digital I/O		
16	GPIO_12	Digital I/O		
17	VDDIO_1	Digital I/O supply	Digital I/O supply input. Support external 1.8 V–3.3 V input voltage.	
18	GPIO_13	Digital I/O	General purpose I/O	
19	GPIO_14	Digital I/O		
20	GPIO_15	Digital I/O		
21	CHIP_EN	Analog/PMU	Master Enable for chip reset pin. The high level of CHIP_EN equals VBATL. Minimum value of high level for CHIP_EN: 1 V	
22	VIO_LDO_OUT	PMU	Output of on-chip I/O supply regulator, connect internally to VDDIO0. Typical output: 1.8 V	VDDIO0
23	VDD_DIGCORE_1V	Analog/PMU	On-chip LDO output for digital core	
24	VREG	Analog/PMU	DC-DC feedback pin of switch regulator	
25	VSW	Analog/PMU	DC/DC converter switching node	
26	VSS_BUCK	Analog/PMU	DC/DC converter supply and general battery GND	
27	VBAT_BUCK/VBATL	Analog/PMU	Power supply: 2.4 V to 3.8 V	

Copyright © 2024 Shenzhen Goodix Technology Co., Ltd.

Pin #	Pin Name	Pin Type	Description/Default Function	Voltage Domain
28	LFXO_32K_OUT	PMU	Output of inverting amplifier connected to 32.768 kHz crystal	
29	LFXO_32K_IN	PMU	Input of inverting amplifier connected to 32.768 kHz crystal	
30	MSIO_4	Mixed Signal I/O	Configurable mixed-signal I/O with digital I/O and analog I/O	VBATL
31	MSIO_3	Mixed Signal I/O		
32	MSIO_2	Mixed Signal I/O		
33	MSIO_1	Mixed Signal I/O		
34	MSIO_0	Mixed Signal I/O		
35	TEST_MODE	Analog/RF	Input pin, used for factory test mode selection • 1: factory test mode • 0: normal operation mode **Note:** In practice, the value is set to 0 and the pin is connected to GND by default.	
36	AON_GPIO_0	Digital I/O	Always-on GPIO; can wake up chip from sleep modes	VDDIO0
37	AON_GPIO_1	Digital I/O		
38	AON_GPIO_2	Digital I/O		
39	AON_GPIO_3	Digital I/O		
40	AON_GPIO_4	Digital I/O		
41	AON_GPIO_5	Digital I/O		
42	AON_GPIO_6	Digital I/O		
43	AON_GPIO_7	Digital I/O		
44	GPIO_24	Digital I/O	General purpose I/O	
45	GPIO_25	Digital I/O		
46	GPIO_16	Digital I/O		
47	GPIO_17	Digital I/O		
48	GPIO_31	Digital I/O		
49	GPIO_30	Digital I/O		
50	GPIO_26	Digital I/O		
51	GPIO_27	Digital I/O		
52	GPIO_28	Digital I/O		
53	GPIO_29	Digital I/O		
54	VDD_AMS	Analog/RF	AMS supply: 1.1 V. Connect to VREG.	
55	HFXO_32M_OUT	Analog/RF	Output of inverting amplifier connected to 32 MHz crystal	

Copyright © 2024 Shenzhen Goodix Technology Co., Ltd.

Pin #	Pin Name	Pin Type	Description/Default Function	Voltage Domain
56	HFXO_32M_IN	Analog/RF	Input of inverting amplifier connected to 32 MHz crystal	

Note:

- The pad drive strength for GPIO and AON_GPIO pins can be configured to 4 mA under 3.3 V voltage.
- The pad drive strength for MSIO pins can be configured to 2 mA under 3.3 V voltage.

2.3 QFN56 (Without Flash)

The figure below shows the pin assignment for devices in QFN56 package (without Flash).

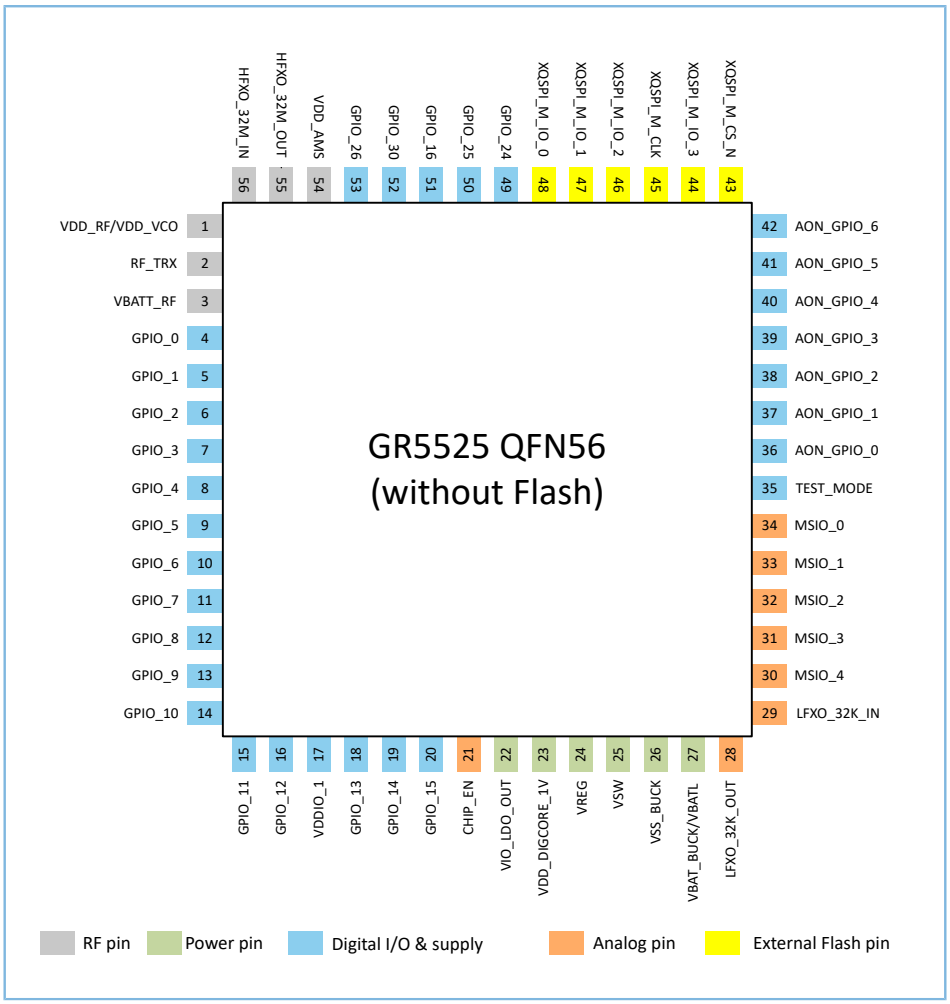

Figure 2-3 QFN56 (without Flash) pinout from top view

The following table provides the descriptions of pin functionality.

Table 2-3 Pin description

Pin #	Pin Name	Pin Type	Description/Default Function	Voltage Domain
1	VDD_RF/VDD_VCO	Analog/RF supply	Synthesizer VCO supply/RF supply: 1.1 V; connect to VREG	
2	RF_TRX	Analog/RF	RF transceiver RX input and TX output	
3	VBATT_RF	Analog/RF Supply	RF SPA and bandgap supply; connect to VBATL	
4	GPIO_0	Digital I/O	General purpose I/O; default: SWD_CLK	VDDIO1
5	GPIO_1	Digital I/O	General purpose I/O; default: SWD_IO	
6	GPIO_2	Digital I/O	General purpose I/O	
7	GPIO_3	Digital I/O		
8	GPIO_4	Digital I/O		
9	GPIO_5	Digital I/O		
10	GPIO_6	Digital I/O		
11	GPIO_7	Digital I/O		
12	GPIO_8	Digital I/O		
13	GPIO_9	Digital I/O		
14	GPIO_10	Digital I/O		
15	GPIO_11	Digital I/O		
16	GPIO_12	Digital I/O		
17	VDDIO_1	Digital I/O supply	Digital I/O supply input. Support external 1.8 V–3.3 V input voltage.	
18	GPIO_13	Digital I/O	General purpose I/O	
19	GPIO_14	Digital I/O		
20	GPIO_15	Digital I/O		
21	CHIP_EN	Analog/PMU	Master Enable for chip reset pin. The high level of CHIP_EN equals VBATL. Minimum value of high level for CHIP_EN: 1 V	
22	VIO_LDO_OUT	PMU	Output of on-chip I/O supply regulator, connect internally to VDDIO0. Typical output: 1.8 V	VDDIO0
23	VDD_DIGCORE_1V	Analog/PMU	On-chip LDO output for digital core	
24	VREG	Analog/PMU	DC-DC feedback pin of switch regulator	
25	VSW	Analog/PMU	DC-DC converter switching node	
26	VSS_BUCK	Analog/PMU	DC-DC converter supply and general battery GND	
27	VBAT_BUCK/VBATL	Analog/PMU	Power supply: 2.4 V to 3.8 V	
28	LFXO_32K_OUT	PMU	Output of inverting amplifier connected to 32.768 kHz crystal	

Copyright © 2024 Shenzhen Goodix Technology Co., Ltd.

Pin #	Pin Name	Pin Type	Description/Default Function	Voltage Domain
29	LFXO_32K_IN	PMU	Input of inverting amplifier connected to 32.768 kHz crystal	
30	MSIO_4	Mixed Signal I/O	Configurable mixed-signal I/O with digital I/O and analog I/O	VBATL
31	MSIO_3	Mixed Signal I/O		
32	MSIO_2	Mixed Signal I/O		
33	MSIO_1	Mixed Signal I/O		
34	MSIO_0	Mixed Signal I/O		
35	TEST_MODE	Analog/RF	Input pin, used for factory test mode selection • 1: factory test mode • 0: normal operation mode **Note:** In practice, the value is set to 0 and the pin is connected to GND by default.	
36	AON_GPIO_0	Digital I/O	Always-on GPIO; can wake up chip from sleep modes	VDDIO0
37	AON_GPIO_1	Digital I/O		
38	AON_GPIO_2	Digital I/O		
39	AON_GPIO_3	Digital I/O		
40	AON_GPIO_4	Digital I/O		
41	AON_GPIO_5	Digital I/O		
42	AON_GPIO_6	Digital I/O		
43	XQSPI_M_CS_N	Digital I/O	Connected to an external Flash	
44	XQSPI_M_IO_3	Digital I/O		
45	XQSPI_M_CLK	Digital I/O		
46	XQSPI_M_IO_2	Digital I/O		
47	XQSPI_M_IO_1	Digital I/O		
48	XQSPI_M_IO_0	Digital I/O		
49	GPIO_24	Digital I/O	General purpose I/O	
50	GPIO_25	Digital I/O		
51	GPIO_16	Digital I/O		
52	GPIO_30	Digital I/O		
53	GPIO_26	Digital I/O		
54	VDD_AMS	Analog/RF	AMS supply: 1.1 V. Connect to VREG.	
55	HFXO_32M_OUT	Analog/RF	Output of inverting amplifier connected to 32 MHz crystal	
56	HFXO_32M_IN	Analog/RF	Input of inverting amplifier connected to 32 MHz crystal	

Copyright © 2024 Shenzhen Goodix Technology Co., Ltd.

Note:

- The pad drive strength for GPIO and AON_GPIO pins can be configured to 4 mA under 3.3 V voltage.
- The pad drive strength for MSIO pins can be configured to 2 mA under 3.3 V voltage.

Copyright © 2024 Shenzhen Goodix Technology Co., Ltd.

3 Minimal Design for GR5525 SoC

The absolute necessary sections required for the GR5525 SoC minimal system operation include

- Power supply
- Clock
- RF
- I/O pins
- SWD interfaces
- External Flash

To ensure the proper operation of a GR5525 SoC, the design guidelines for the schematic diagram and the PCB layout are illustrated in the following sections.

3.1 Schematic Design Guideline

For the minimal schematic for a GR5525 SoC, see "Section 4.1 Reference Schematic Diagram".

3.1.1 Power Supply

3.1.1.1 Introduction

GR5525 SoCs are powered by external power sources through VBATL (voltage range: 2.4 V to 3.8 V).

To avoid the switch overshoot caused by battery welding, connect the battery to a resistor (0.39 Ω – 1 Ω) and VBATL in series when powering on a GR5525 SoC in operation. It is recommended to convert the battery voltage to 3.3 V with LDO or DC-DC before supplying VBATL.

Figure 3-1 shows the power management unit (PMU) in a GR5525 SoC.

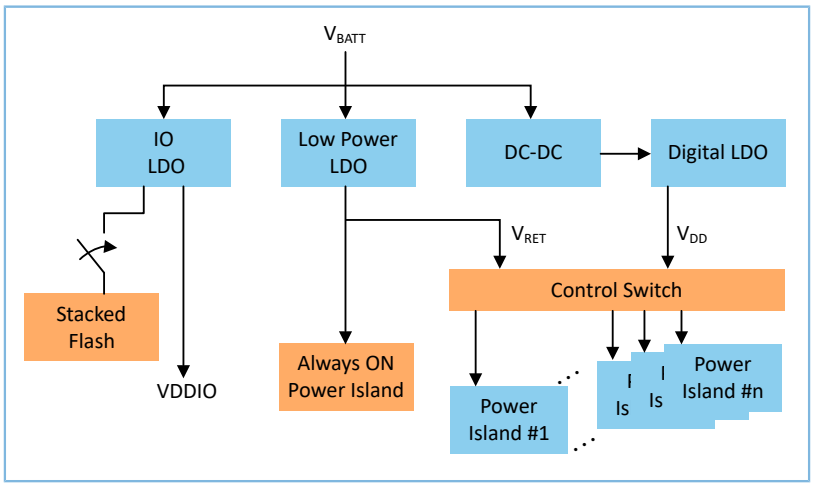

Figure 3-1 GR5525 PMU block diagram

PMU is responsible for generating all required voltages for different blocks in GR5525.

Copyright © 2024 Shenzhen Goodix Technology Co., Ltd.

- I/O LDO supplies on-chip Flash (except for GR5525I0NI) and I/O pins. For more information, see "Section 3.1.1.3 I/O LDO".
- For active mode, a DC-DC converter generates the voltage for the transceiver and an LDO regulator generates the voltage for digital blocks.
- GR5525 uses an LDO regulator to supply its Always-ON (AON) modules that stay ON when both the MCU subsystem and the Bluetooth LE subsystem are OFF. The LDO regulator also generates a lower voltage for content retention to the memories where their content is needed after wake-up.
- Both the retention voltage and the digital voltage are connected to all power islands through a control switch matrix on the chip.

3.1.1.2 Power-on Sequence

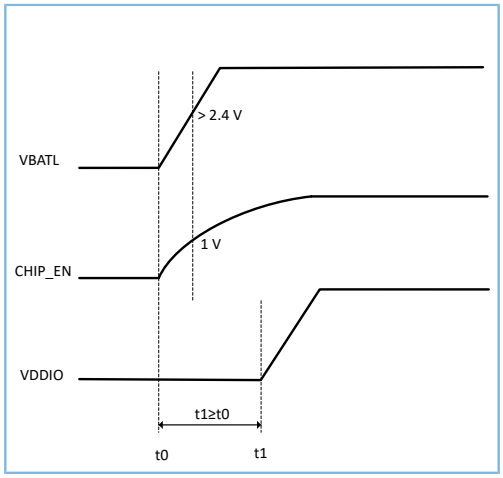

Figure 3-2 GR5525 power-on sequence

Note:

- After power-on, when CHIP_EN reaches 1 V, VBATL shall be above 2.4 V.
- Do not power on VDDIO before VBATL.
- When GR5525 works as Slave, VBATL cannot be powered on after CHIP_EN is pulled low. Otherwise, the I/O state might be out of control and forced to output high level.

In GR5525 applications where devices are supplied by rechargeable batteries but the charger does not support power path management (PPM), when the battery is recharged after its voltage decreases to 0 V (battery depletion due to self-discharge in long-term shipping or storage), the system will fail to be started because it fails to follow the power-on sequence. To avoid this problem, it is recommended to follow the charger solutions below:

Copyright © 2024 Shenzhen Goodix Technology Co., Ltd.

- Use a charger with PPM instead.

  To use a charger that supports system power path management, follow the recommended circuit design in Figure 3-3.

  - The battery charging path and the system power supply path can be managed independently: When battery voltage drops to 0 V, connect the charger with an external power source from the USB port. After the input power going through Qbypass and Qrvs, the voltage V_{SYS} supplies the system, and the Vbat controlled by Qswitch supplies the 0 V battery.
  - When charging starts, V_{SYS} will instantly rise to the pre-set value, and GR5525 VBATL will also instantly reach the operating voltage or above. The system can keep working normally in this case, thanks to the delay circuit on CHIP_EN that helps ensure GR5525 power-on sequence.

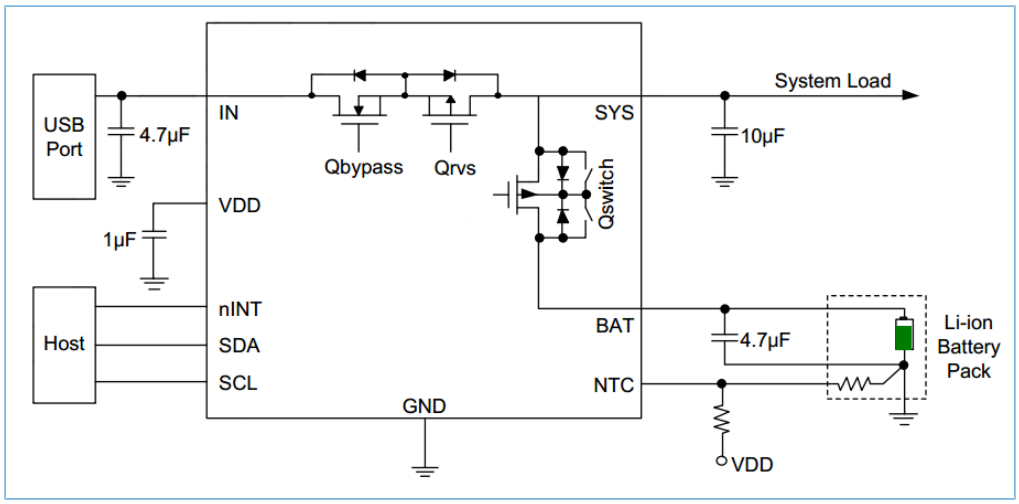

Figure 3-3 Reference design for charger with PPM

- Continue using a charger without PPM.

  In most cases, the battery voltage is converted to the constant voltage 3.3 V through LDO before supplying GR5525. As path management is not supported, use a MOSFET (Q1) to control LDO as shown in Figure 3-4, and ensure the LDO is only enabled after the preset battery level is reached (sufficient to ensure normal operation of GR5525), so that the system can be started normally.

  During system charging, the gate voltage of Q1 (Vg) is obtained through the voltage divider composed of two resistors (Ra and Rb). When Ra is set to be equal to Rb, Vg is set to 2.5 V, and the condition for turning on Q1 during the charging is: Vbat ≥ 2.5V + |Vgs(th)|, in which Vgs(th) represents the threshold gate-to-source voltage of the MOSFET (Q1).

  Source voltage of Q1 (Vs) equals Vbat, and rises gradually during charging. When Vbat reaches Vgs(th), Q1 is turned on, and the voltage at the EN pin of LDO (V_{LDO_EN}) equals Vbat; at this point, LDO is enabled, and GR5525 can be started normally.

  - During charging, the relations between Q1 state and V_{LDO_EN} are as follows:
    - When Vbat < 2.5 V + |Vgs(th)|, Vgs fails to reach Vgs(th), and therefore Q1 is in cutoff state; V_{LDO_EN} equals 0 V.

Copyright © 2024 Shenzhen Goodix Technology Co., Ltd.

- When Vbat ≥ 2.5 V + |Vgs(th)|, Vgs reaches Vgs(th), and therefore Q1 is in conducting state; V_{LDO_EN} equals Vbat.

◦ When the system is working normally without charging, and the USB port is not connected to an external power source, Vg of Q1 is 0 V, determined by the pull-down resistor Rb; Q1 is in conducting state, and V_{LDO_EN} equals Vbat.

To obtain Vg: Vg = Vusb x Rb / (Ra + Rb)

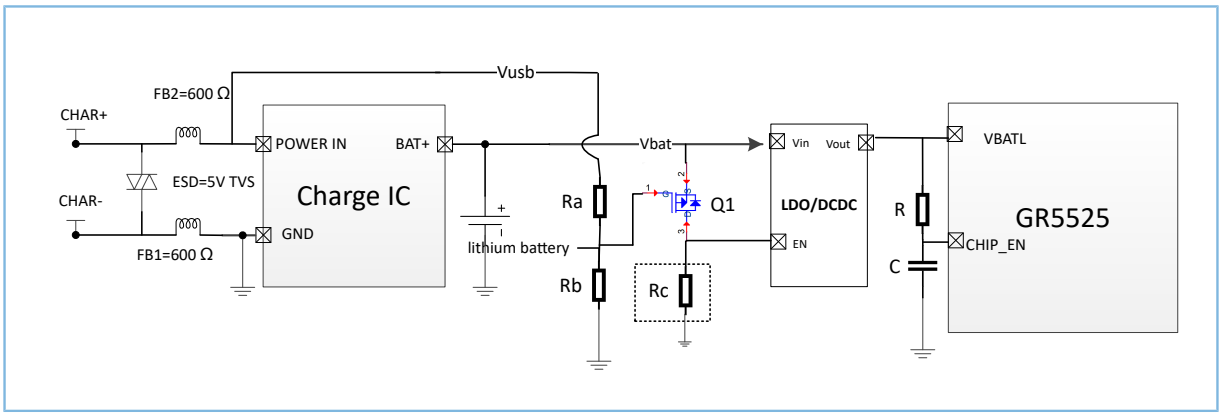

Figure 3-4 Reference design for charger not supporting PPM

Note:

◦ The MOSFET Q1 is a P-channel MOSFET (PMOS).

◦ Resistances of Ra and Rb can be set according to the parameters of Q1.

◦ It is recommended to reserve Rc for setting the initial state of LDO. If Rc is surface-mounted, leakage current I (I = Vbat/Rc) will be generated, and will incur higher system power consumption.

Recommended MOSFETs are detailed in the table below:

Table 3-1 Recommended MOSFETs

Type	Part Number	Vgs(th)	Id (μA)	$R_{DS(ON)}$ @ Vgs = –2.5 V	Footprint Reference	Manufacturer
PMOS	CJBB3139K	–1.1 V (Max.)	-0.66	780 mΩ	DFN1006-3L-A	JSCJ
PMOS	NTK3139P	–1.2 V (Max.)	-1	520 mΩ	SOT-723	ON Semiconductor

Alternatively, you can also add an external circuit that enables path management for the charger, so that GR5525 can be started normally.

Copyright © 2024 Shenzhen Goodix Technology Co., Ltd.

3.1.1.3 I/O LDO

The GR5525 has an on-chip linear LDO regulator that supplies on-chip Flash at a nominal value of 1.8 V by default (and also supplies the external Flash through VIO_LDO_OUT), as well as the chip's I/O (the VDDIO0 pins). Additionally, this regulator can supply external components (sensors) which interfaces to the GR5525. The LDO is capable of supplying up to 30 mA load current.

The output of this regulator is the VIO_LDO_OUT pin. A 1 µF decoupling capacitor should be placed close to this pin.

Three I/O voltage domains are provided for GR5525: two digital voltage domains (VDDIO_0 and VDDIO_1), as well as one mixed signal I/O domain MSIO, corresponding to reference voltage levels at VDDIO_0, VDDIO_1, and VBATL respectively. Figure 3-5 is a circuit diagram showing the connection between VIO_LDO_OUT and the I/O domains.

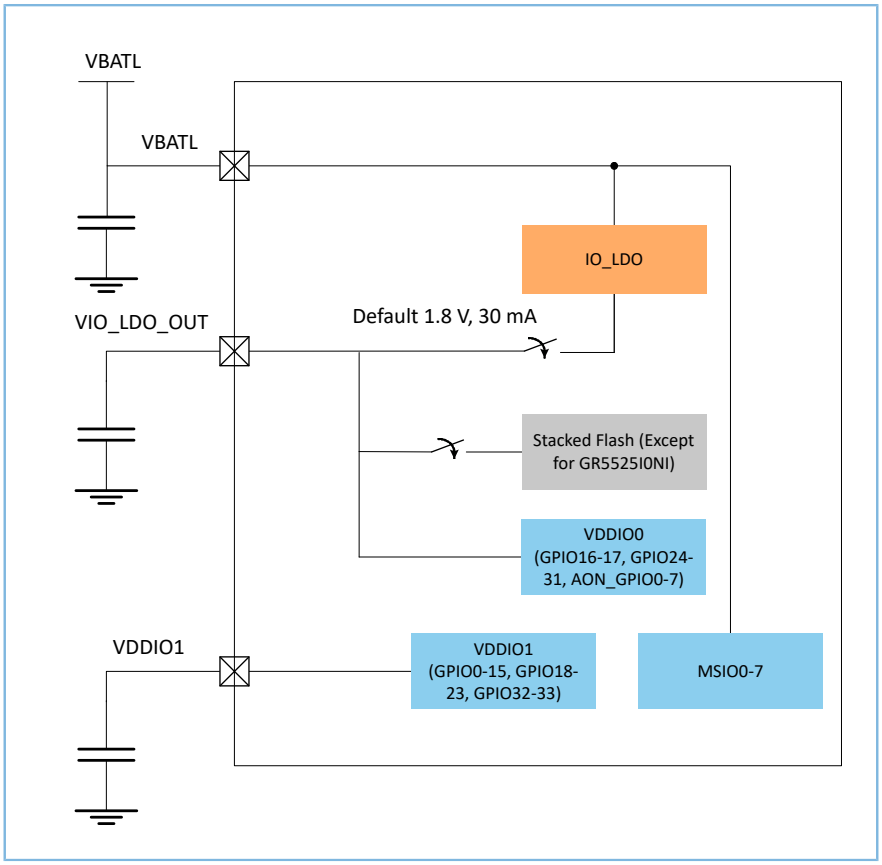

Figure 3-5 Connection between VIO_LDO_OUT and I/O domains

Copyright © 2024 Shenzhen Goodix Technology Co., Ltd.

Note:

- Voltage supply from I/O LDO is adjustable within the range of 1.8 V to 3.0 V (default: 1.8 V) by software configuration.
- VDDIO_0 is connected to VIO_LDO_OUT internally, and is not bonded to any package pins.
- The power source of VDDIO_1 can be either VIO_LDO_OUT or an external power supply (typical voltage range: 1.8 V–3.3 V). When VDDIO_1 is powered by VIO_LDO_OUT, VDDIO_1 needs to be connected to VIO_LDO_OUT outside the chip.
- When VDDIO_1 is powered by an external source, the GPIO levels of VDDIO_1 vary, depending on the source voltage level.
- The leakage current of I/O LDO is approximately 0.7 µA.
- The input voltage of VDDIO_0 (VIO_LDO_OUT) and VDDIO_1 cannot exceed VBATL.
- The voltage domain VDDIO_1 supplies GPIO_0 – GPIO_15, GPIO_18–GPIO_23 and GPIO_32–GPIO_33; VDDIO_0 supplies GPIO_16 – GPIO_17, GPIO_24 – GPIO_31 and AON_GPIO_0 – AON_GPIO_7.

3.1.1.4 Power Supply Scheme

GR5525 SoCs are equipped with a complete set of power management modules, which guarantee the smooth and secure functioning of the GR5525 SoCs. This section introduces the GR5525 reference circuit design by taking a GR5525 SoC in QFN68 package as an example (see Figure 3-6).

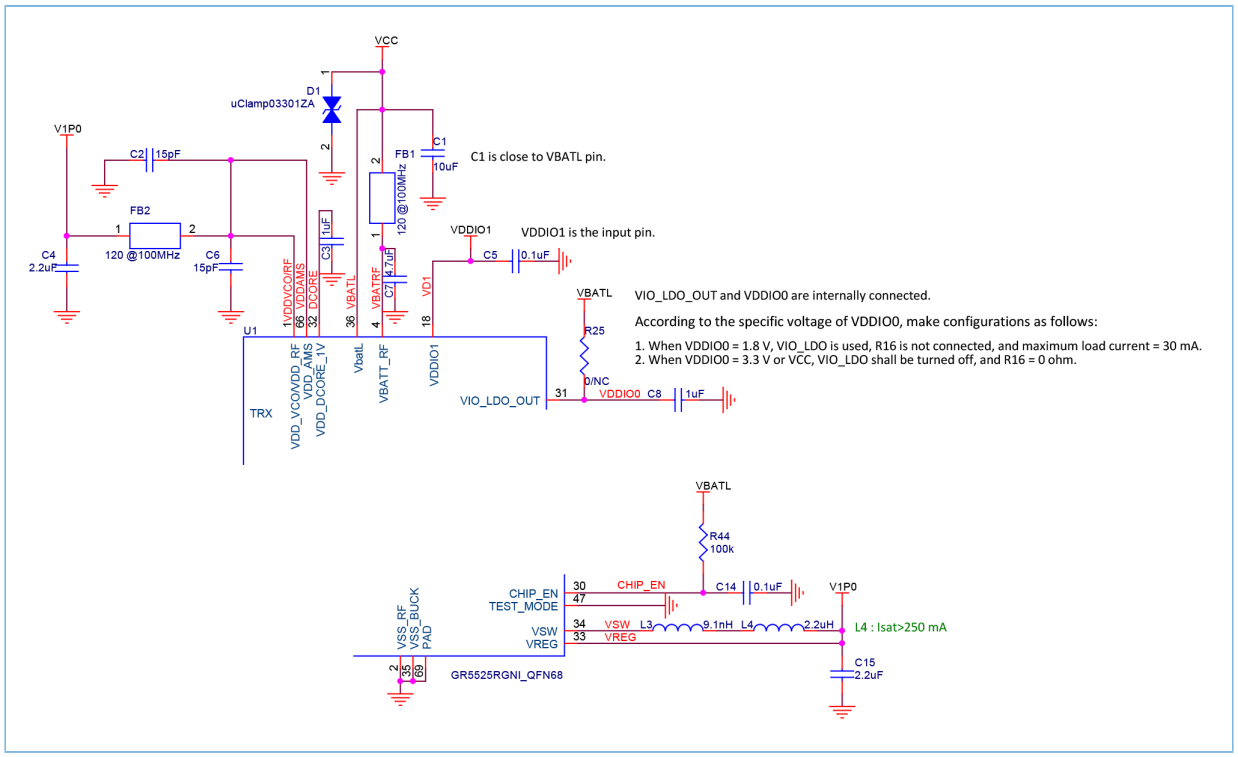

Figure 3-6 Power section of GR5525

The detailed pin descriptions and connection guidance are as follows:

- **VDD_VCO/VDD_RF:** internal RF block supply, connected to V1P0 (output power net of DC-DC switching regulator) and a 2.2 µF/15 pF filter capacitor
- **VDD_AMS:** internal analog block supply, connected to V1P0 (output power net of DC-DC switching regulator) and a 15 pF filter capacitor
- **VDD_DIGCORE_1V:** output of digital LDO, which supplies the digital core logic. Place a 1 µF filter capacitor on this pin.
- **VBATL:** input supply for chip – ranging from 2.4 V to 3.8 V; typical value: 3.3 V; connected to a 10 µF filter capacitor
- **VBATT_RF:** connected to VBATL; connected to a 4.7 µF filter capacitor
- **VIO_LDO_OUT:** output of the on-chip VDDIO LDO regulator (connected to VDDIO0 internally by default), which is used to supply the on-chip Flash. Typical output voltage: 1.8 V. It can also supply the VDDIO pins and external sensors with up to 30 mA load current. Connected to a 1 µF decoupling capacitor
- **VSW:** DC-DC switching regulator output, connected to two inductors in series: a 9.1 nH inductor for reducing RF interference caused by switching noise and a 2.2 µH power inductor, as well as a 2.2 µF capacitor, to supply the SoC from V1P0 as a complete DC-DC circuit. The pin is also connected to VDD_VCO/VDD_RF and VDD_AMS through external circuits.
- **VREG:** feedback pin from the DC-DC switching regulator output, connected to V1P0
- **VDDIO1:** supply pin for I/O1 voltage domain, supplied from VIO_LDO_OUT or external regulator, connected to a 0.1 µF filter capacitor

Recommended capacitors, ferrite beads, and inductors are listed in following tables.

Table 3-2 Recommended decoupling capacitors and ferrite beads for the power section

Reference	Description	Value	Package	Mfg Part #
C15	CAP, CER, X5R, 2.2 µF (±10%), 6.3 V	2.2 µF	0603	Murata GRM188R61C225KE15D
C5, C14	CAP, CER, X7R, 0.1 µF (±10%), 10 V	0.1 µF	0402	Murata GRM155R71A104KA01D
C3, C8	CAP, CER, X5R, 1 µF (±10%), 6.3 V	1 µF	0402	Samsung CL05A105KO5NNNC
C4	CAP, CER, 2.2 µF (±10%), X5R, 10 V	2.2 µF	0402	Murata GRM155R61A225KE95D
C1	CAP, CER, X5R, 10 µF (±20%), 10 V	10 µF	0603	Murata GRM188R61A106ME69
C2, C6	CAP, CER, NPO, 15 pF (±5%), 50 V	15 pF	0402	Murata GRM1555C1H150JA01D

Copyright © 2024 Shenzhen Goodix Technology Co., Ltd.

Reference	Description	Value	Package	Mfg Part #
C7	CAP, CER, 4.7 µF (±10%), X5R, 10 V	4.7 µF	0402	Murata GRM155R61A475KEAAD
FB1, FB2	Ferrite bead, 120 Ω @ 100 MHz, 400 mA, 500 mΩ, 0603	120 Ω @ 100 MHz	0603	Murata BLM18AG121SN1

Table 3-3 DC-DC inductors (9.1 nH) recommended for use

Reference	Value	DC Resistance (Max)	Saturation Current	Size L x W x H (mm)	Mfg Part #
L3	9.1 nH	0.32 Ω	300 mA	1.0 x 0.5 x 0.5	Murata LQG15HS9N1J02D

Table 3-4 DC-DC inductors (2.2 µH) recommended for use

Reference	Value	DC Resistance (Typ)	Saturation Current	Size L x W x H (mm)	Mfg Part #
L4	2.2 µH ± 20%	0.3 Ω	250 mA	1.6 x 0.8 x 0.8	Sunlord MPH160809S2R2
		0.2 Ω	250 mA	1.6 x 0.8 x 0.8	Murata LQM18PN2R2MGH
		0.38 Ω	300 mA	1.6 x 0.8 x 0.8	Murata LQM18PN2R2MFH

The 2.2 µH DC-DC inductors are adopted in DC-DC buck converter circuits in Pulse Skip Mode (PSM) and play a crucial role in these circuits. The saturation current of the circuit shall be higher than 250 mA. To ensure secure operation and to improve the performance of GR5525, inductors with higher saturation current and lower direct current resistance are preferred, because a higher direct current resistance means higher power consumption.

3.1.2 Clock

3.1.2.1 Introduction

GR5525's clock source is generated by an external 32 MHz crystal oscillator, and the real-time clock by an external 32.768 kHz crystal oscillator.

3.1.2.2 32 MHz Clock (XO)

The system clock, or CPU clock, is provided by an external 32 MHz crystal oscillator. Table 3-5 shows the specification for the crystals that can be used for these applications, and Table 3-6 shows some recommended component examples.

Copyright © 2024 Shenzhen Goodix Technology Co., Ltd.

Table 3-5 GR5525 crystal specifications

Parameter	Description	Conditions	Min.	Typ.	Max.	Unit
Crystal Freq	Crystal oscillator frequency	-	-	32	-	MHz
ESR	Equivalent series resistance	-	-	-	100	ohm
C_{load}	Load capacitance	-	6	-	8	pF
f-Xtal	Crystal frequency initial tolerance	-	-	-	±50	ppm
f-Xtal	Crystal frequency tolerance – over temperature	-	-	-	±30	ppm
f-Xtal	Crystal frequency tolerance – aging over life of product	-	-	-	±10	ppm
P_{DRV}	Max drive power	-	-	-	100	µW

Table 3-6 Recommended 32 MHz crystal examples

Part Number	Abracon ABM10W-32.0000MHZ-6-D1X-T3	TAITIEN G0068-X-006-3	Murata XRCGB32M000F5N10R0	TXC 8Z32000004
Frequency	32 MHz	32 MHz	32 MHz	32 MHz
Initial tolerance	±10 ppm	±40 ppm	±50 ppm	±10 ppm
Tolerance over Temp.	±20 ppm	±30 ppm	±30 ppm	±20 ppm
Load capacitance	6 pF	6 pF	6 pF	8 pF
ESR	70 ohm	30 ohm	≤ 100 Ω	≤ 60 Ω
Temperature range	–40°C to +85°C	–40°C to +105°C	–40°C to +85°C	–40°C to +85°C
Size (L x W x H, mm)	2.5 x 2.0 x 0.60	2.5 x 2.0 x 0.60	2.0 x 1.6 x 0.60	2.5 x 2.0 x 0.60

Note:

- To ensure system stability and low power consumption, load capacitance of the 32 MHz crystal oscillator should be within the range from 6 pF to 8 pF. The 32 MHz crystal oscillator does not need to be connected with load capacitors, but it needs to use the production tool for frequency offset calibration.
- When designing an application circuit, reserve the interface or test points (SWDCLK, SWDIO, CLK_TRIM (any GPIOs except MSIOs), GND, VBAT) required by the mass production tool.

3.1.2.3 32.768 kHz Clock

The GR5525 uses a low-power, low-frequency clock in sleep modes, which also extends battery lifespan. The utilization of the external 32.768 kHz crystal oscillator provides tighter timing and better accuracy, resulting in lower overall power consumption.

The GR5525 integrates an adjustable load capacitor, and typically no external load capacitors are required.

The external crystal must meet the recommended operating conditions as indicated in Table 3-7, and Table 3-8 shows examples of crystals that meet the specifications.

Copyright © 2024 Shenzhen Goodix Technology Co., Ltd.

Table 3-7 32.768 kHz crystal oscillator recommended operating conditions

Parameter	Description	Conditions	Min.	Typ.	Max.	Unit
Crystal Freq	Crystal oscillator frequency	-	-	32.768	-	kHz
ESR	Equivalent series resistance	-	-	-	100,000	ohm
C_{load}	Load capacitance	-	6	-	9	pF
f-Xtal	Crystal frequency initial tolerance	-	-	-	±50	ppm
f-Xtal	Crystal frequency tolerance – over temperature and aging	-	-	-	±250	ppm
PDRV	Max drive power	-	-	-	0.5	µW

Table 3-8 32.768 kHz crystal oscillator example specifications

Part Number	Abracon ABS05-32.768KHZ-9-T
Frequency	32.768 kHz
Initial tolerance	±20 ppm
Tolerance over Temp.	±250 ppm
Load capacitance	9 pF
ESR	90,000 ohm
Temperature range	–40°C to +85°C
Size (L x W x H, mm)	1.6 x 1.0 x 0.50

Note:

To ensure system stability and low power consumption, load capacitance of the 32.768 kHz crystal oscillator shall be within the range from 6 pF to 9 pF.

3.1.3 RF

3.1.3.1 Introduction

Figure 3-7 shows the functional block diagram of a GR5525 transceiver.

Copyright © 2024 Shenzhen Goodix Technology Co., Ltd.

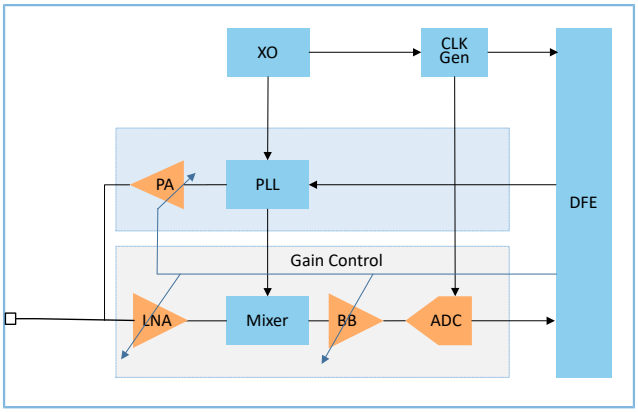

Figure 3-7 GR5525 transceiver architecture

Operating mechanisms:

- On the receiver side:
  1. After the antenna receives an RF signal, the receiver digitizes the signal in a path: Low noise amplifier (LNA) > Mixer > Baseband (BB) amplifier > an analog-to-digital converter (ADC).
  2. The digitized signals are sent to the digital frontend (DFE) for demodulation.
  3. The digital frontend provides Automatic Gain Control (AGC) feedback signals to adjust the gain of the LNA and BB amplifier to maximize the signal-to-noise ratio (SNR) at the demodulation.
- On the transmitter side:
  1. The digital signal from the DFE is transmitted to a phase-locked loop (PLL) for modulation.
  2. The modulated carrier wave is delivered to a power amplifier (PA) with amplification factor configurable by the digital gain settings.
  3. The modulated carrier is transmitted to the antenna through a low-power or high-power PA path. The antenna radiates the amplified carrier wave through electromagnetic waves.

Note:

RF and digital clocks are generated from the HFXO_32M.

3.1.3.2 RF Scheme

The following figure is the recommended RF matching circuit in the GR5525 SoC minimal system, by taking a GR5525 SoC in QFN56 package as an example.

Copyright © 2024 Shenzhen Goodix Technology Co., Ltd.

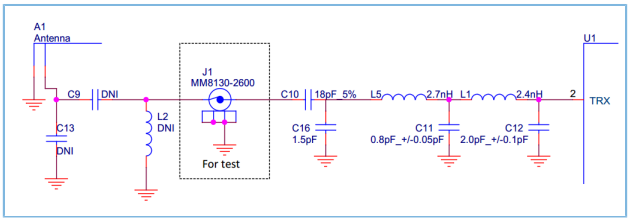

Figure 3-8 RF scheme (QFN56 package)

Two matching networks are recommended for the RF TRX path from the TRX pin to the antenna, to achieve matching of PA output impedance to antenna impedance.

- Antenna matching network

  In the circuit, the left PI matching network (composed of the inductor L2 plus capacitors C9 and C13) matches the antenna. Values of the matching component are adjusted according to the actual antenna used. It is recommended to use mature antenna schemes and recommended values from antenna manufacturers.

- SoC matching network

  The right PI type matching network (composed of the inductors L1 and L5 plus capacitors C11, C12 and C16) matches the internal PA of GR5525. The network connects to the TRX pin of the chip.

The two matching networks are connected by the DC blocking capacitor C10.

Recommended configurations of the capacitors and inductors are displayed in Table 3-9.

Table 3-9 Recommended components for the RF section

Reference	Description	Value	Package Size	Mfg Part #
C10	CAP, CER, NPO, 18 pF (±5%), 50 V	18 pF	0402	Murata GRM1555C1H180JA01D
C11	CAP, CER, NPO, 0.8 pF (±0.05 pF), 50 V	0.8 pF	0402	Murata GRM1555C1HR80WA01D
C12	CAP, CER, NPO, 2.0 pF (±0.1 pF), 50 V	2.0 pF	0402	Murata GRM1555C1H2R0BA01D
C16	CAP, CER, C0G, 1.5 pF (±0.1 pF), 50 V	1.5 pF	0201	Murata GRM0335C1H1R5BA01D
L1	Inductor, Wirewound, 2.4 nH (±0.2 nH), 50 mohm, Q = 20 @ 250 MHz	2.4 nH	0402	Murata LQW15AN2N4B00
L5	Inductor, 2.7 nH (±0.1 nH), 120 mΩ, Q = 14@500 MHz	2.7 nH	0402	Murata LQG15HS2N7B02D

3.1.4 I/O Pins

The GR5525 has software-configurable I/O pin assignment where different peripherals can be multiplexed out on different chip pins. When configured to GPIOs, they can be set as input, output, with configurable pull-up or pull-down resistors. I/O pins retain their last state when system enters the sleep or deep sleep mode. Only AON_GPIOs can be used to wake up the system from sleep/deep sleep mode.

Copyright © 2024 Shenzhen Goodix Technology Co., Ltd.

Note:

- For more details of pin mux, refer to *GR5525 Datasheet*.
- Note that MSIO pins do not support hardware interrupt when allocating I/O functions during designing PCB applications.
- Two PWM modules (PWM0 and PWM1) are provided, with each containing three separate output channels: PWMA, PWMB, and PWMC. Frequencies of the three PWM channels in one group are the same, and individual frequency control is not supported. Phase and duty cycle of each channel can be configured via registers.
- Make sure the input voltages of VDDIO_1 and VIO_LDO_OUT (VDDIO_0) do not exceed the VBATL voltage.
- Make sure the sink voltages of all I/Os (GPIOs, MSIOs, and AON IOs) do not exceed the VBATL voltage.

3.1.5 SWD Interfaces

GR5525 connects to J-Link for modulation by using Serial Wire Debug (SWD) interfaces.

Table 3-10 shows the pins to which the SWD interfaces connect in QFN68 and QFN56 packages.

Table 3-10 Pin matching for SWDCLK and SWDIO in QFN68 and QFN56 packages

SWD	Pin # (QFN68)	Pin # (QFN56)
SWD_CLK	Pin 5	Pin 4
SWD_IO	Pin 6	Pin 5

The pins can be multiplexed as GPIOs when the SWD interfaces are not in use.

3.1.6 Flash

Most GR5525 members provides embedded Flash, with only one exception (GR5525I0NI) which uses external Flash. Details about the Flash of the GR5525 series are provided below.

Table 3-11 GR5525 Flash details

Part Number	GR5525RGNI	GR5525RGNIL	GR5525IGNI	GR5525IGNIL	GR5525IENI	GR5525I0NI
Flash Type	Internal	Internal	Internal	Internal	Internal	External
Voltage Features	Wide voltage Range: 1.65 V–3.6 V	Low voltage Typ.: 1.8 V	Wide voltage Range: 1.65 V–3.6 V	Low voltage Typ.: 1.8 V	Wide voltage Range: 1.65 V–3.6 V	Low & high voltage • Low (Typ.): 1.8 V • High (Typ.): 3.3 V

- **Power source:**
  - I/O LDO: Both embedded Flash and external Flash can be supplied by the on-chip LDO regulator (I/O LDO), with the typical LDO output voltage at 1.8 V.

    On-chip Flash is connected to I/O LDO internally. To supply the external Flash, connect VIO_LDO_OUT to the power input of the external Flash.

Copyright © 2024 Shenzhen Goodix Technology Co., Ltd.

- External power supply: as specified in the option 1 below

- **High voltage scenario application**:

  For GR5525 members embedded with wide-voltage Flash and for GR5525I0NI, to use the SoCs in high-voltage scenarios, make sure to:

  1. Set I/O LDO to off mode in eFuse, and use an external power supply. Use VIO_LDO_OUT as input for the VDDIO_0 domain, and connect VIO_LDO_OUT to the external power supply.
  2. Alternatively, set I/O LDO to bypass mode and connect VBATL to the output of I/O LDO.

- **External Flash: model selection**

  GR5525I0NI uses an external Flash with various model options provided and supports both low-voltage (typical: 1.8 V) and high-voltage (typical: 3.3 V) Flash. Typically, GR5525 supports all generic Flash models that meet the electrical characteristics as specified in *GR5515I0NDA Flash Selection Guide*. A number of Flash models are tested, with the recommended ones listed below.

Table 3-12 Recommended GR5525I0NI series Flash candidates (high voltage)

Flash Model	Manufacturer	Flash Size	Voltage Range (V)
P25Q128H	Puya Semiconductor	128 Mb	2.30–3.60
W25Q64JV	Winbond	64 Mb	2.70–3.60
XM25QH64A	XMC	64 Mb	2.30–3.60
XT25F64B	XTX	64 Mb	2.70–3.60

Table 3-13 Recommended GR5525I0NI series Flash candidates (low voltage)

Flash Model	Manufacturer	Flash Size	Voltage Range (V)
P25Q128L	Puya Semiconductor	128 Mb	1.65–2.00
XT25Q64D	XTX	64 Mb	1.65–2.10

Note:

- Not all external Flash supports data read at 64 MHz. In such case, lower the Quad SPI data rate based on the actual Flash data transfer rate.
- In practice, the operating frequency of GR5525I0NI Flash varies depending on component package, layout, and routing of the whole system. Therefore, it is recommended that you choose a proper Flash memory that meets the electrical characteristics and functional requirements based on actual project demands.

Copyright © 2024 Shenzhen Goodix Technology Co., Ltd.

3.2 PCB Design and Layout Guideline

3.2.1 PCB Layer Stackup

A 4-layer PCB layout is recommended to be used for all GR5525 package options. Figure 3-9 shows the recommended layer stackup (thickness: 1.6 mm) of GR5525.

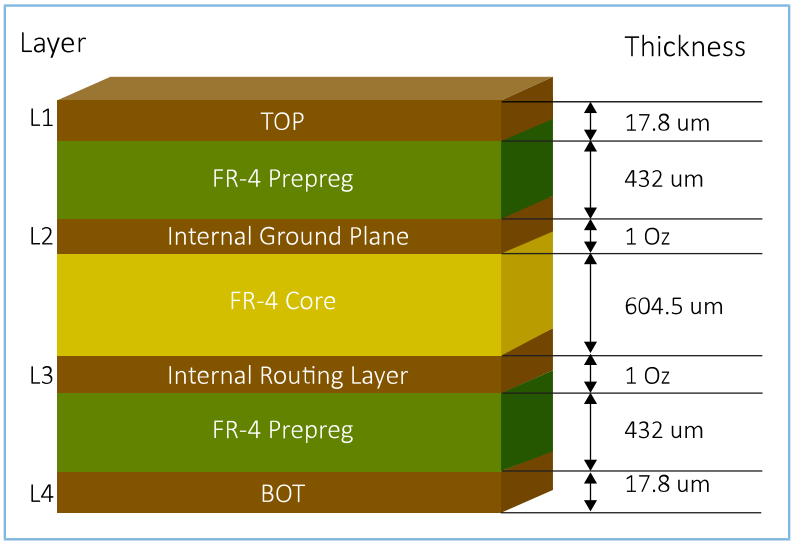

Figure 3-9 GR5525 PCB layer stackup

L1: top layer where components, RF transmission lines, and key signal lines are placed

L2: internal ground plane, used for both the ground return path and the reference plane for the 50 ohm RF transmission line

L3: internal routing layer, used to split power domains and place a small number of signal lines

L4: bottom layer where components and signal lines are placed

---

Note:

The customer's product design can be adjusted according to the actual situation. A typical example for designing 4-layer PCB layouts is provided in "Section 4.2.1 Four-layer PCBs", to help users quickly get started with development and PCB layout design.

For users who need to reduce costs, choose 2-layer PCBs, with special attention to the layout of power filter components, power input, the ground return path for DC-DC buck converters, and completeness of the reference plane for RF route. For details on the layout and routing, see "Section 4.2.2 Two-layer PCBs".

Copyright © 2024 Shenzhen Goodix Technology Co., Ltd.

3.2.2 Components Layout

All components operating at high frequency should have their layout made as compact as possible. This will prevent the cross-coupling between lines and also minimize the parasitic effects which will have a negative impact on the operating parameters.

When designing the layout, make sure the main chip is as close to the antenna interface as possible, and no other components are under the RF routing if possible (the layout and routing of RF components are of higher priority).

3.2.3 Power Supply

Power supply is essential to ensure proper operation of an SoC, and therefore special attention should be paid on the layout and routing of the key power systems, which are DC-DC switching regulator and RF input power supply. To avoid system-level issues (such as poor performance in ESD protection and radiation off limits) caused by improper power design, abide by the design guides described in the two following sections.

3.2.3.1 DC-DC Switching Regulator

Take GR5525RGNI for example. The chip includes a DC-DC switching regulator. To design the PCB layout involving a DC-DC switching regulator,

1. Components (L3: 9.1 nH inductor, L4: 2.2 µH inductor, and C15: 2.2 µF capacitor) connected to DC-DC switching regulator should be placed as close to VSW and VREG of the chip as possible. A distance within 3 mm is recommended.
2. The net of VSW radiates stronger interference before VSW signals passing through the inductors, and thus should be placed at a minimum distance of 0.2 mm from other power nets and signals, especially V1P0 and VDD_DIGCORE_1V.
3. Placing L4 perpendicular to L3 is recommended, to avoid inductive coupling. C15 should be placed behind L4, and VREG network is connected to the power supply after capacitor filtering.
4. GND pin of C15 should be placed as close to VSS_BUCK of the chip as possible. Vias of C15 GND pin should be placed as close to the GND pin as possible. It is recommended to connect the C15 GND pin to VSS_BUCK by using GND Polygon Plane, so that the return path of the power can be kept minimal.

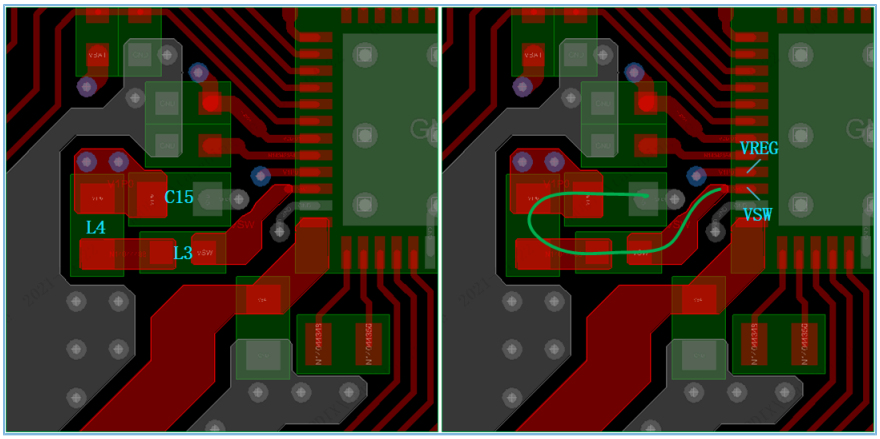

Figure 3-10 Reference layout and routing for DC-DC switching regulator

Copyright © 2024 Shenzhen Goodix Technology Co., Ltd.

Note:

The green line in the right figure of Figure 3-10 indicates the power output path.

3.2.3.2 RF Input Power Supply

Make sure the following instructions are met when designing RF input power supply in PCB layout, to ensure optimal performance and to avoid excessively high radiation.

1. Decoupling capacitors connected to VDD_VCO/VDD_RF and VBATT_RF should be as close to the corresponding pins as possible (around 1 mm is recommended, and shall not exceed 3 mm, as shown in Figure 3-11). C4 and C5 are placed close to VDD_VCO and VDD_RF respectively, and C3 is placed close to VBATT_RF. Place the capacitors on the same layer with the pins if possible, and make sure the wiring path goes through the capacitors first and then connected to the chip power pins. In case the capacitors are not placed on the same layer with the pins, the vias should be located close to the decoupling capacitors.
2. The power trace should be as short as possible, and at least 0.2 mm wide. A minimum distance at 0.2 mm from other signals should be guaranteed.

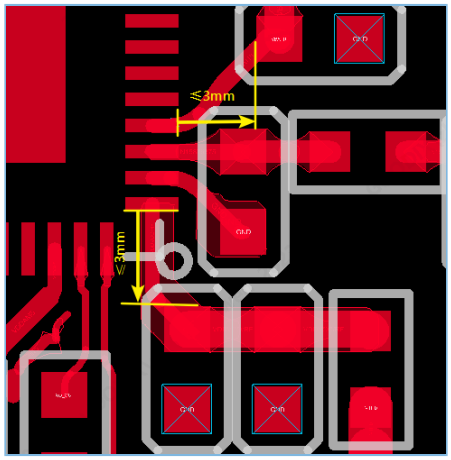

Figure 3-11 Reference layout and routing for RF input power supply

3.2.3.3 Digital and Analog Power Supply

Decoupling capacitors connected to digital/analog power supply pins should also be placed as close to the corresponding pins as possible, as specified below.

Table 3-14 Correlations between capacitors and digital/analog power pins

Reference	Value	Corresponding Pin
C1	10 µF	VBATL
C2	15 pF	VDD_AMS
C6	1 µF	VDD_DIGCORE_1V
C7	0.1 µF	VDDIO_1
C8	1 µF	VIO_LDO_OUT

Copyright © 2024 Shenzhen Goodix Technology Co., Ltd.

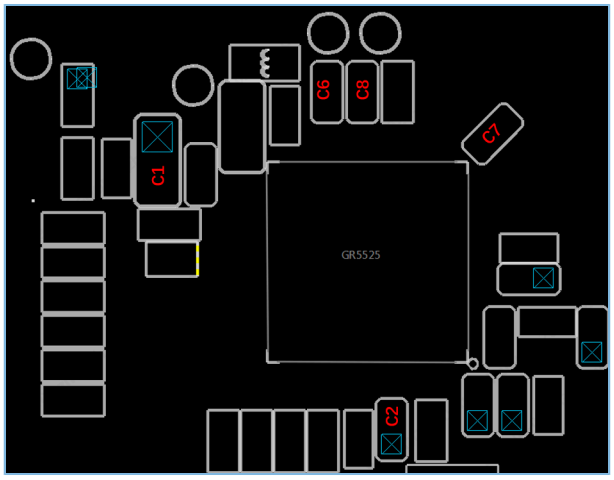

Figure 3-12 Layout reference of decoupling capacitors for digital/analog power supply pins

3.2.4 Clock

Place the crystal as close as possible to the IC (recommended distance: ≤4 mm). This will minimize any additional capacitive load on the input pins and reduce the chance of crosstalk and interference with other signals on the board. Make sure there is no other trace routed next to/under the crystal or the crystal routing traces.

It is recommended to shield the routing traces of the 32 MHz crystal with GND traces. If the ground below the crystal is clean and no crosstalk or interference is involved, provide openings underneath the crystal pads (as shown in Figure 3-14) to reduce parasitic capacitance.

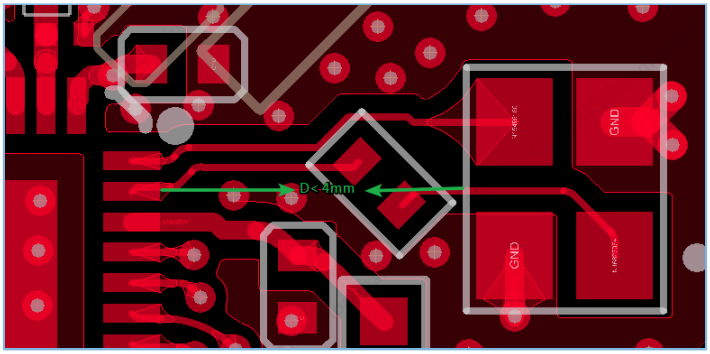

Figure 3-13 Reference clock layout

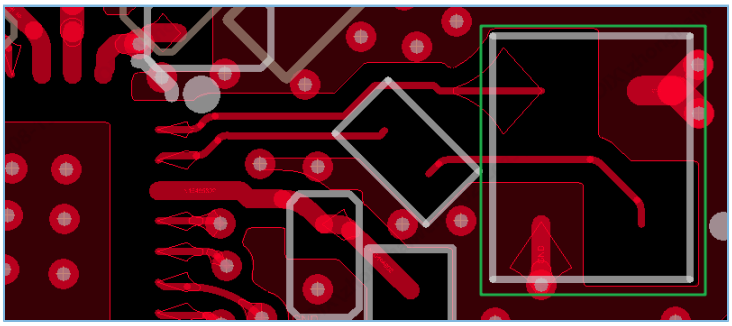

Figure 3-14 Openings under XO pads

Copyright © 2024 Shenzhen Goodix Technology Co., Ltd.

3.2.5 RF Port

The GR5525 provides a single-ended RF port. A copper RF trace with a characteristic impedance of 50 Ω is required to interconnect the RF port and the antenna. Because the impedance of RF port is not 50 Ω, a matching network is required to match the port impedance between the RF port and the 50 Ω transmission line.

Components in this network must be placed as close as possible to the RF pin. Try to place the first component no further than 1 mm from the RF pin. Figure 3-15 shows the PCB layout of the RF port.

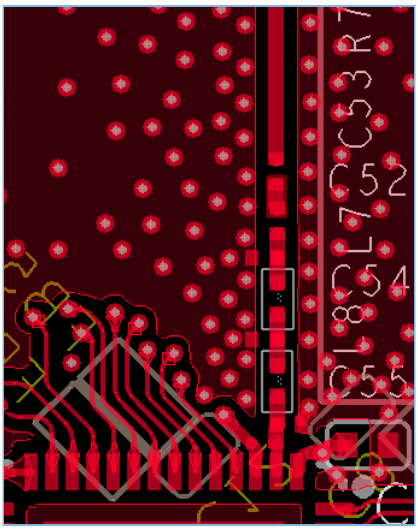

Figure 3-15 RF port PCB layout

Note:

- The RF route should be straight and as short as possible. If a curving route is necessary for a specific structure, an inverted arc is required for a turning, and angles at or less than 90° are not allowed.
- RF routing at the PCB surface (the top layer or the bottom layer) helps avoid using vias or switching layers, and is therefore preferred. Avoid stub routes, and make sure the reference ground plane underneath the RF route is complete. The RF route should be of the same width as the component pad, to avoid discontinuities in the 50 Ω transmission line due to mismatch between the component pad size and trace size.

Taking the 4-layer PCB layout design as an example, the transmission line is routed as a coplanar waveguide using layer-2 ground as the reference plane. The dimensions are:

- Trace width: 559 µm
- Spacing from trace to top layer: 178 µm
- Spacing from top layer to layer 2: 432 µm

The design uses FR-4 dielectric and 0.5 ounce copper on the outer layer. In actual design, PCB manufacturers are required to provide single-ended RF traces with an impedance of 50 Ω (±10%).

Ground vias should be placed along the transmission line every 1.25 mm and right next to the ground pads of the matching components.

Copyright © 2024 Shenzhen Goodix Technology Co., Ltd.

A PI-network should be placed close to the antenna feedpoint for antenna matching purposes. The matching network value of antenna is adjusted according to the actual antenna used. It is recommended to use mature antenna schemes and recommended values of antenna factories.

3.2.6 Grounding

Always provide a solid grounding for the radio IC of GR5525. Use as many vias as possible to create a solid GND under the IC itself and connect it to inner and bottom GND layers.

For the center ground paddle (at the package bottom), use a matrix of 3 x 3, 4 x 4, or other vias to the ground-plane.

The GND of the 10 µF filter capacitor connecting to VBATL shall be close to the main GND pin, and apply copper pouring if possible (see "Section 3.2.3 Power Supply"). The ground return path of the GND pin (VSS_BUCK) of DC-DC power shall be in good condition, which guarantees stable and secure operation of ICs.

Note:

- Make sure the ground-pad shape follows the shape of the paddle on chip, including the exposed paddle parts.
- Make sure a ground via is placed right next to the TRX pin.

3.3 ESD Protection Design

3.3.1 System-level ESD Design

System efficient electrostatic discharge (ESD) design is crucial for any circuits, and requires users to follow the design guidelines (including schematic diagrams, PCB layout, and product structural designs) provided in the sections below.

3.3.1.1 ESD Schematic Design

1. GR5525 series is powered by an independent external LDO regulator (see "Section 3.1.1 Power Supply" for details).
2. A transient voltage suppressor (TVS) diode is connected to the VBATL pin, to improve the ESD capability of the system; recommended TVS diode model: µClamp03301ZA, with its electrical characteristics excerpted below.

Table 3-15 Electrical characteristics of µClamp03301ZA (T = 25°C unless otherwise specified)

Parameters	Descriptions	Conditions		Min.	Typ.	Max.
V_{RWM} (V)	Reverse stand-off voltage	Pin 1 to 2				3.3
V_{BR} (V)	Reverse breakdown voltage	I_t = 1 mA, Pin 1 to 2		5	6.5	8
I_R (nA)	Reverse leakage current	V_{RWM} = 3.3 V, Pin 1 to 2			<1	50
V_C (V)	Clamping voltage	tp = 1.2/50 µs (Voltage), 8/20 µs (Current) combination Waveform, R_S = 2 Ω	I_{PP} = 15 A, Pin1 to 2		3.8	5.5
V_C (V)	ESD clamping voltage	tp = 0.2/100 ns (TLP), Pin 1 to 2	I_{PP} = 4 A		3.6	

Copyright © 2024 Shenzhen Goodix Technology Co., Ltd.

Parameters	Descriptions	Conditions		Min.	Typ.	Max.
			I_{PP} = 16 A		4.7	
R_{DYN} (Ohms)	Dynamic resistance	tp = 0.2/100 ns (TLP), Pin 1 to 2			0.08	
C_J (pF)	Junction capacitance	V_R = 0 V, f = 1 MHz			38	50

3. To suppress static voltages, connect a ferrite bead to each of the two charging ports (CHAR+ and CHAR-) in series, and connect a proper TVS diode between the two ferrite beads to enhance ESD protection, as shown in the figure below.

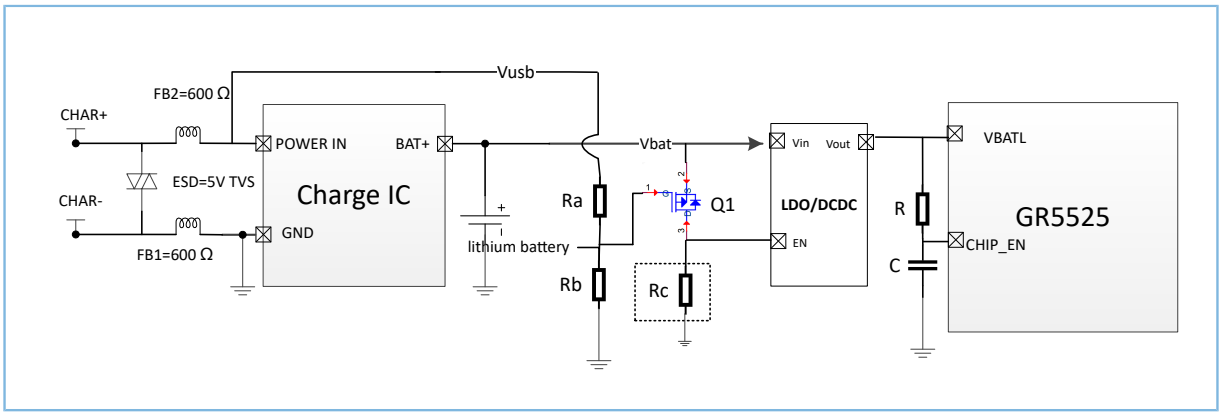

Figure 3-16 ESD protection scheme at charging pads

Recommended models of TVS diodes and ferrite beads, as well as model selection requirements, are listed in the tables below.

Table 3-16 Model selection for TVS diodes

Parameters	Description	Min.	Typ.	Max.
V_{RwM} (V)	Reverse stand-off voltage	-	5 V	-
V_{BR} (V)	Breakdown voltage	-	7 V	-
V_{clamp} (V)	Clamp voltage	-	6 V	-
V_{ESD} (kV)	ESD prevention performance	• Contact discharge: ±10 kV • Air discharge: ±12 kV	-	-

Table 3-17 Model selection for ferrite beads

Parameters	Description	Min.	Typ.	Max.
Impedance@100 MHz (Ω)	Impedance @ 100 MHz	-	600 Ω	-
I_R (mA)	Rated operating current	-	900 mA	-
R_{DC} Max. (mΩ)	Maximum DC resistance	-	230 mΩ	-

Copyright © 2024 Shenzhen Goodix Technology Co., Ltd.

Table 3-18 Recommended TVS diodes

Part Number	V_{RwM} (V)	V_{BR} (V)	V_{clamp} (V)	Operating Temperature	V_{ESD} (kV)	Package	Manufacturer
AZ5C25-01B	5	9	6	–55°C to 85°C	• Contact discharge: ±13 kV • Air discharge: ±16 kV	0201	Amazing Micro.
OVE38E32S1M	6.5	7	10	–55°C to 85°C	• Contact discharge: ±25 kV • Air discharge: ±25 kV	0402	OVREG

Table 3-19 Recommended ferrite beads

Part Number	Impedance @100 MHz	Rated Current	Max. DC Resistance	Operating Temperature	Package	Manufacturer
BLM15PX601SN1	600 Ω	900 mA	230 mΩ	–55°C to 125°C	0402	Murata
WLBD1005HCU601TL	600 Ω	900 mA	230 mΩ	–55°C to 125°C	0402	Walsin

4. To protect products with metal shell against ESD, connect ferrite beads between metal shell GND and the GND on motherboard.
5. To protect products such as smartwatch/wristband against ESD, additional reset mechanisms (such as watchdog timeout reset) are required to enhance ESD protection.

If an external WDT needs to be included, do not start the WDT before firmware is programmed to the SoC, to avoid inadvertent system reset.

Choose WDT that meets the requirements in Table 3-20. A recommended model series is also provided.

Table 3-20 WDT requirements and recommended models

ESD Susceptibility	WDT Reset Time t_{WD}	WDT Output Reset Time t_{RST}	Voltage Input Range	Operating Voltage	Operating Temperature	Recommended Model	Manufacturer
HBM > 2000 V CDM > 500 V	Configurable < 10s	> 100 ms	1.6 V – 5 V	Supporting device sleep mode. No higher than 5 µA is recommended.	–40°C to 85°C	SGM820A/B-X	SGMICRO

To reset the system by using SGM820 as the external WDT, the WDT timeout period can be set with an external capacitor.

Set WDT countdown value with SGM820A-X (standard):

$$t_{WD_standard}(\mathrm{ms}) = 3.33 \times C_{CWD}(\mathrm{nF}) + 0.28(\mathrm{ms})$$

Set WDT countdown value with SGM820B-X (extended):

Copyright © 2024 Shenzhen Goodix Technology Co., Ltd.

$$t_{WD_extended}(\mathrm{ms}) = 78.3 \times C_{CWD}(\mathrm{nF}) + 51(\mathrm{ms})$$

During the reset period t_{WD}, after a feeding-dog pulse signal output (> 50 ns) occurs, the WDT is cleared and the system will not be reset; when an ESD event occurs and leads to software failure, the WDT cannot be cleared during t_{WD}. In this case, the WDT generates a reset signal (200 ms) to reset the system.

A reference schematic design of the WDT is shown in Figure 3-17. Connect nRESET to GR5525 CHIP_EN, so that the WDT can send reset signals to reboot the system in the case of software failure; connect WDI_820 to any GPIO to feed the dog.

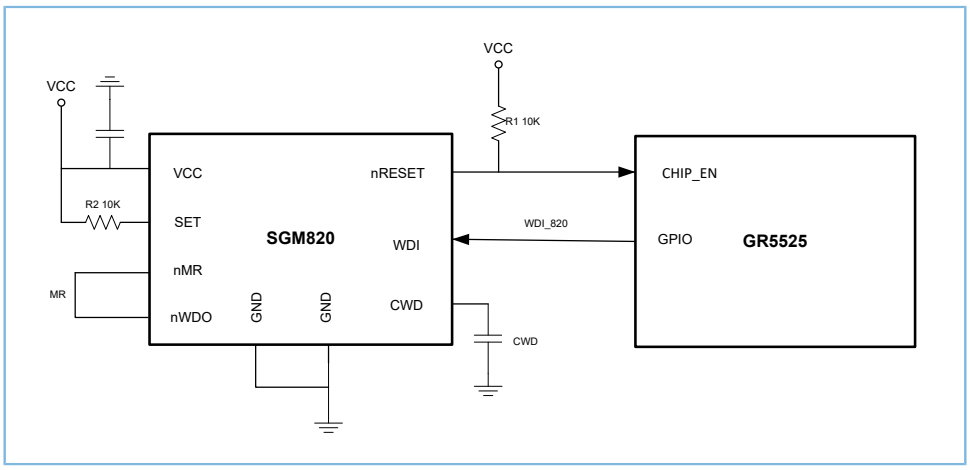

Figure 3-17 Hardware WDT schematic design (reference)

3.3.1.2 PCB Layout Design

1. Live by the following rules for GR5525 PCB grounding:
   - It is recommended to use PCB with four layers or above, and place a GR5525 SoC on the layer adjacent to the GND layer. Make sure the GND layer is solid and complete, to effectively prevent static from setting in.
   - Connect GR5525 GND pin to the GND pin on the top layer, and then connect the GR5525 SoC GND pin to the GND pins on the other layers through vias.
   - Make sure the GND pin of the input capacitor (10 µF) is placed as close to the VSS_BUCK pin as possible, and is connected to EPAD on other layers through at least two vias near VSS_BUCK. The trace from VSS_BUCK to the GND pin should be 0.25 mm wide or above, so as to reduce power/GND loop impedance.
2. To design the layout for charging pads,
   - It is not recommended to place charging pads (CHAR+ and CHAR-) and GR5525 SoC on the same layer. However, if the charging pads and GR5525 SoC are on the same layer, a minimum distance between the two at 4 mm should be guaranteed.

Copyright © 2024 Shenzhen Goodix Technology Co., Ltd.

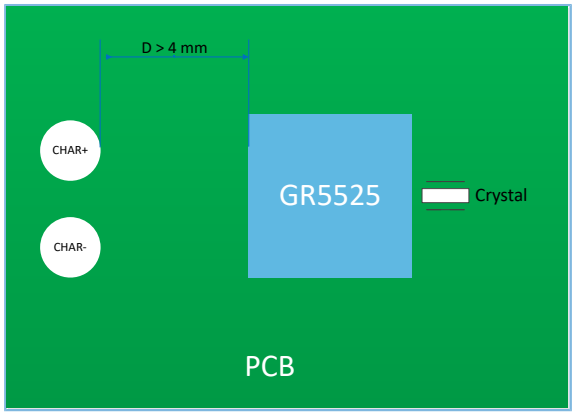

Figure 3-18 Charging pads layout

- Do not place charging pads close to ESD sensitive signals (including clock, reset, and communication signals). Those signals shall also be shielded with ground traces.

3. Place filter capacitors as close to the power pins of GR5525 as possible, to keep the power return path minimal, so as to enhance filtering performance.

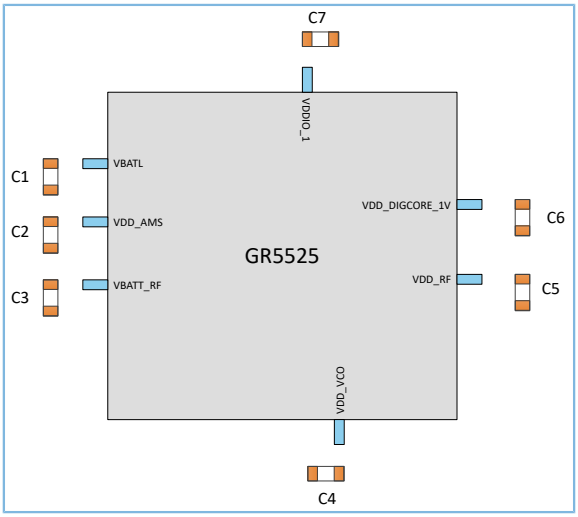

Figure 3-19 Filter capacitor layout for power supply

4. It is recommended to place communication signals neither on the top layer nor the bottom layer in the PCB stack-up, due to the ESD susceptibility of I/O pins. Avoid routing signals susceptible to ESD events (such as clocks and reset pins) at the edge of the board. It is recommended to shield the I/O pins and ESD susceptible signals with GND traces.

Copyright © 2024 Shenzhen Goodix Technology Co., Ltd.

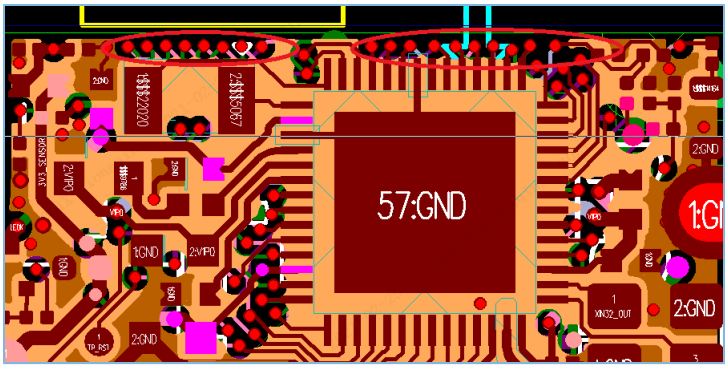

Figure 3-20 Improper I/O routing at board edge (not shielded by GND traces)

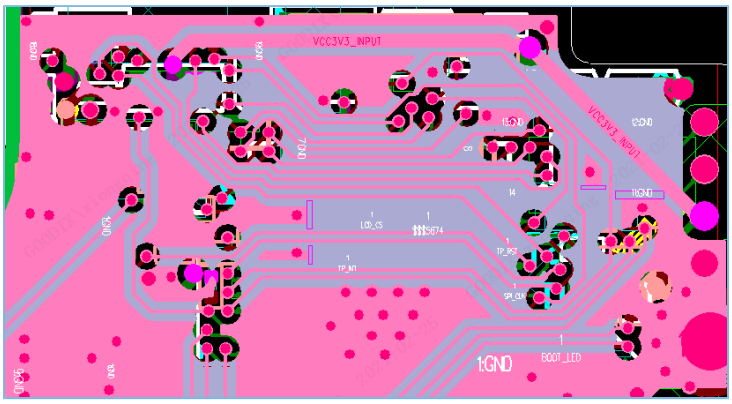

Figure 3-21 Proper routing of I/O pins

5. The capacitors or ESD protection devices should be routed through the pad. Avoid using long wires to connect the capacitors/ESD protection devices to pad, which undermines filtering/protection performance.

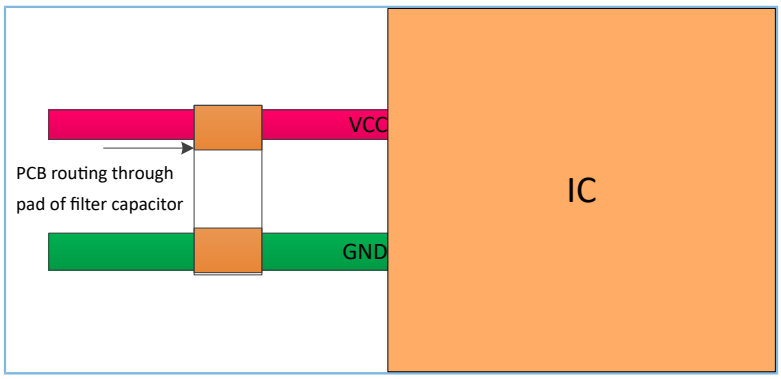

Figure 3-22 Proper routing for a capacitor (as an example)

Copyright © 2024 Shenzhen Goodix Technology Co., Ltd.

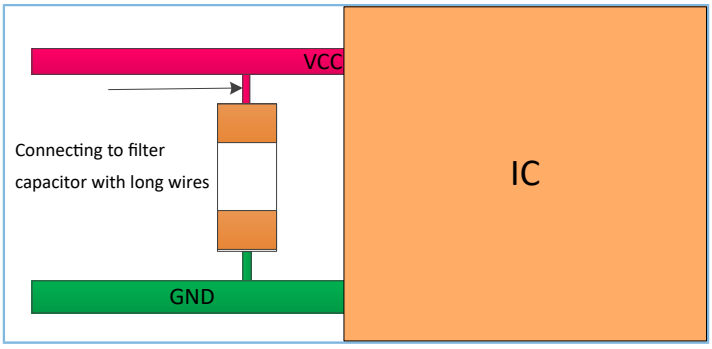

Figure 3-23 Improper routing for a capacitor (as an example)

3.3.1.3 Product Structural Design

- Make sure the shell gaps are sealed to prevent static electricity from setting in.
- Connect ferrite beads in series to the GND pins on the metal shell, and connect the GND pins to the GND circuit on the motherboard, to protect the motherboard from static electricity transmitted through the metal shell.
- Suspended metal structure is not allowed. The steel stiffener of sensors (such as touch/display sensors) should be grounded.
- Try to avoid close contact with the overlapped area between the FPC on the motherboard and the FPC on touch/display sensor module. It is recommended to apply heat resistant adhesives on the exposed area of motherboard connectors, to prevent short circuit or static electricity from setting in.

3.3.2 ESD Considerations in Production, Transport, and Debugging

To steer away from ESD events, stringent ESD control is also required during production, transport, debugging, and other relevant phases.

- Wear antistatic wrist strap in these processes. Touching the SoC with bare hands or using metal tweezers is forbidden.
- Use an antistatic bag/tray to hold the SoC.
- Countermeasures against ESD are essential for soldering irons, welding tables, and test instruments.
- Strictly comply with ESD preventive requirements for the production line during production and transport.

Copyright © 2024 Shenzhen Goodix Technology Co., Ltd.

4 Reference Design

4.1 Reference Schematic Diagram

Figure 4-1 is the reference schematic for GR5525RGNI QFN68 package.

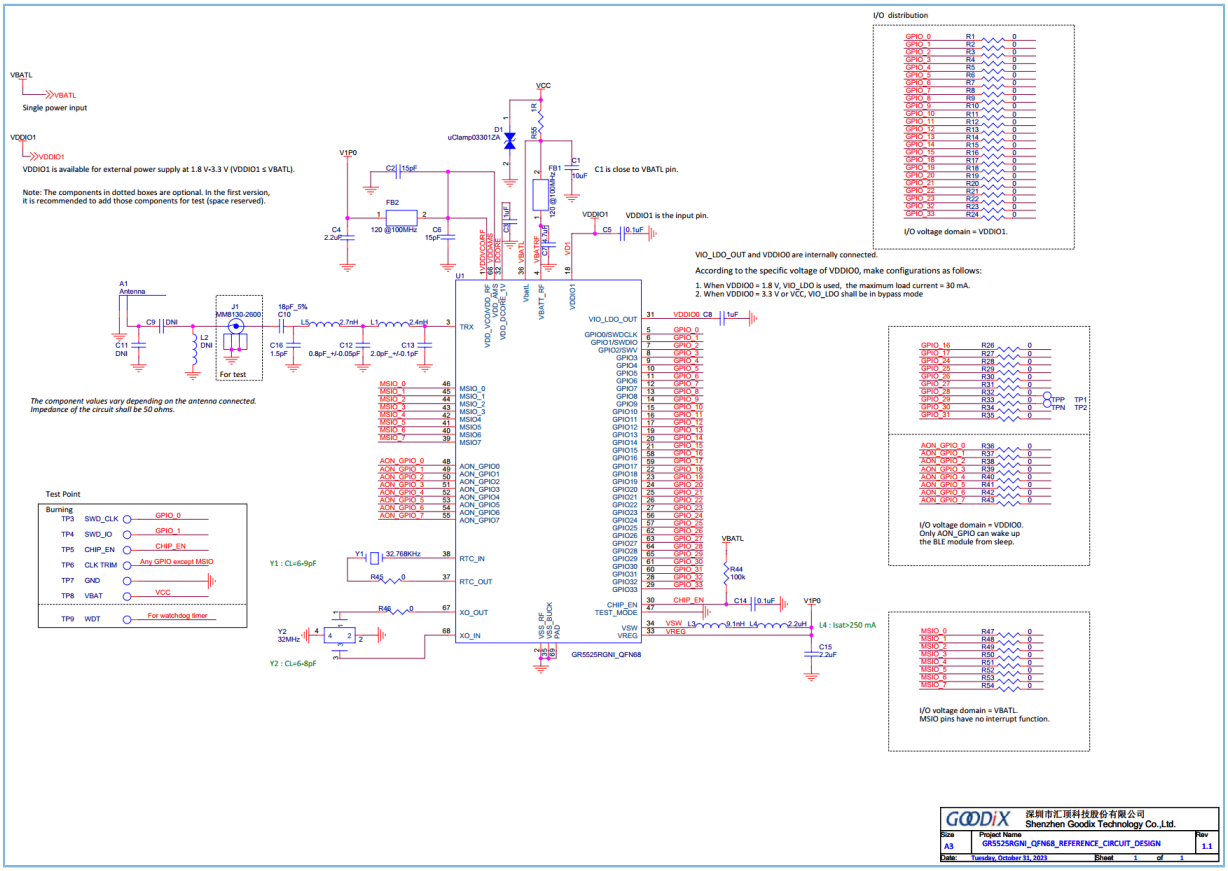

Figure 4-1 Reference schematic for GR5525RGNI QFN68 package

Figure 4-2 is the reference schematic for GR5525IGNI QFN56 package.

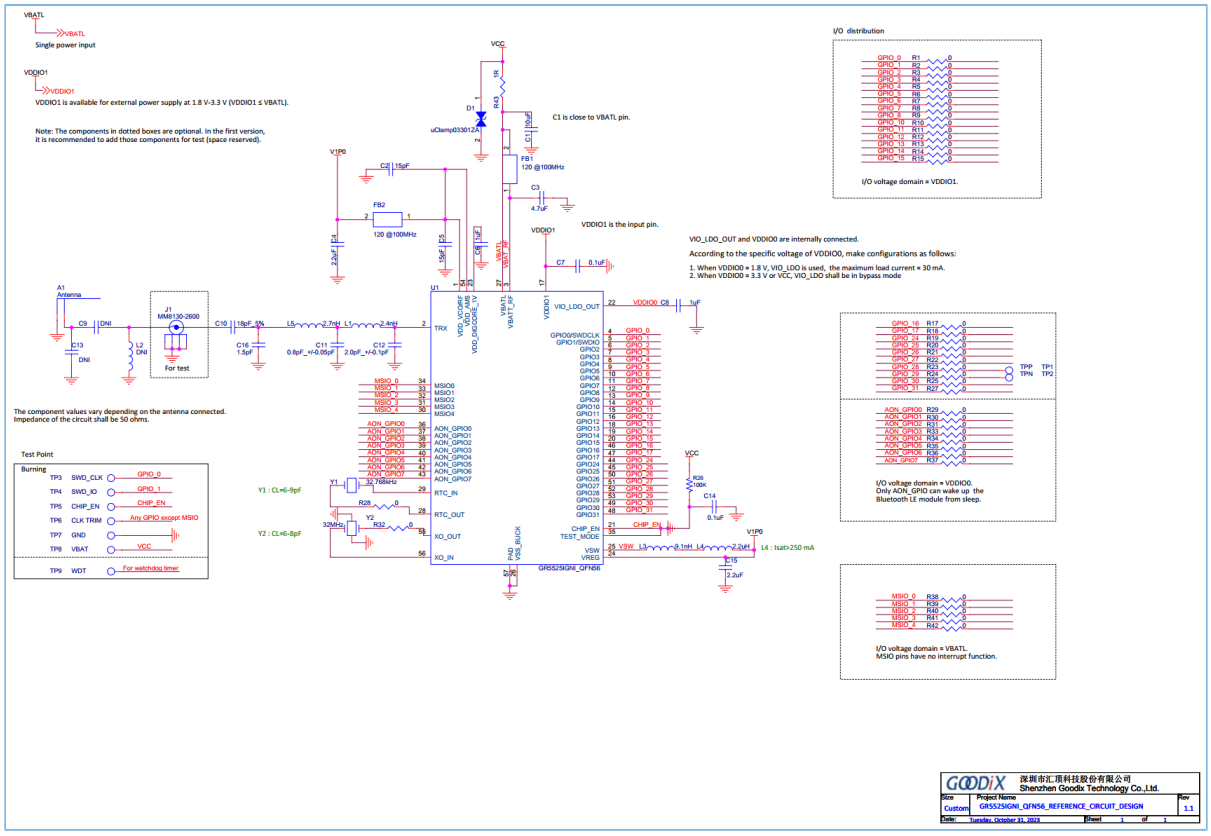

Figure 4-2 Reference schematic for GR5525IGNI QFN56 package

Figure 4-3 is the reference schematic for GR5525IENI QFN56 package.

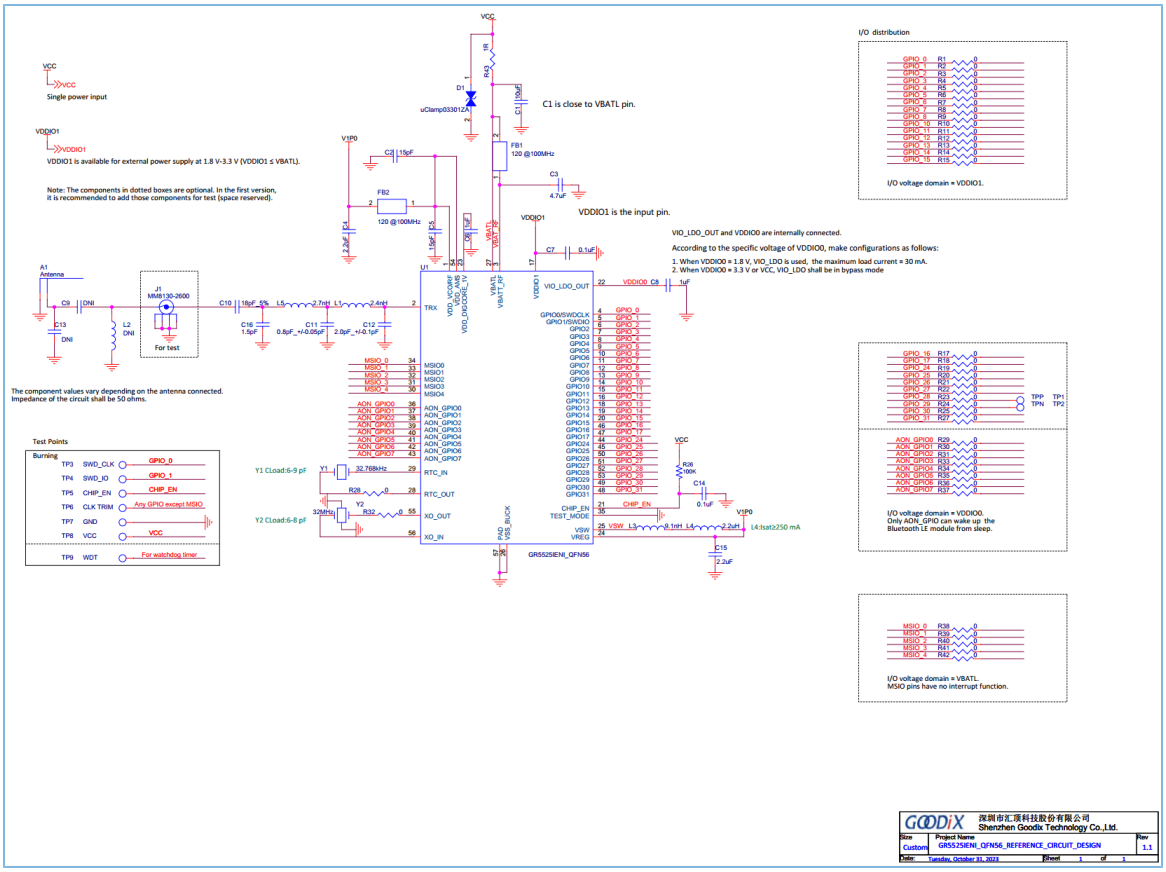

Figure 4-3 Reference schematic for GR5525IENI QFN56 package

Figure 4-4 is the reference schematic for GR5525I0NI QFN56 package.

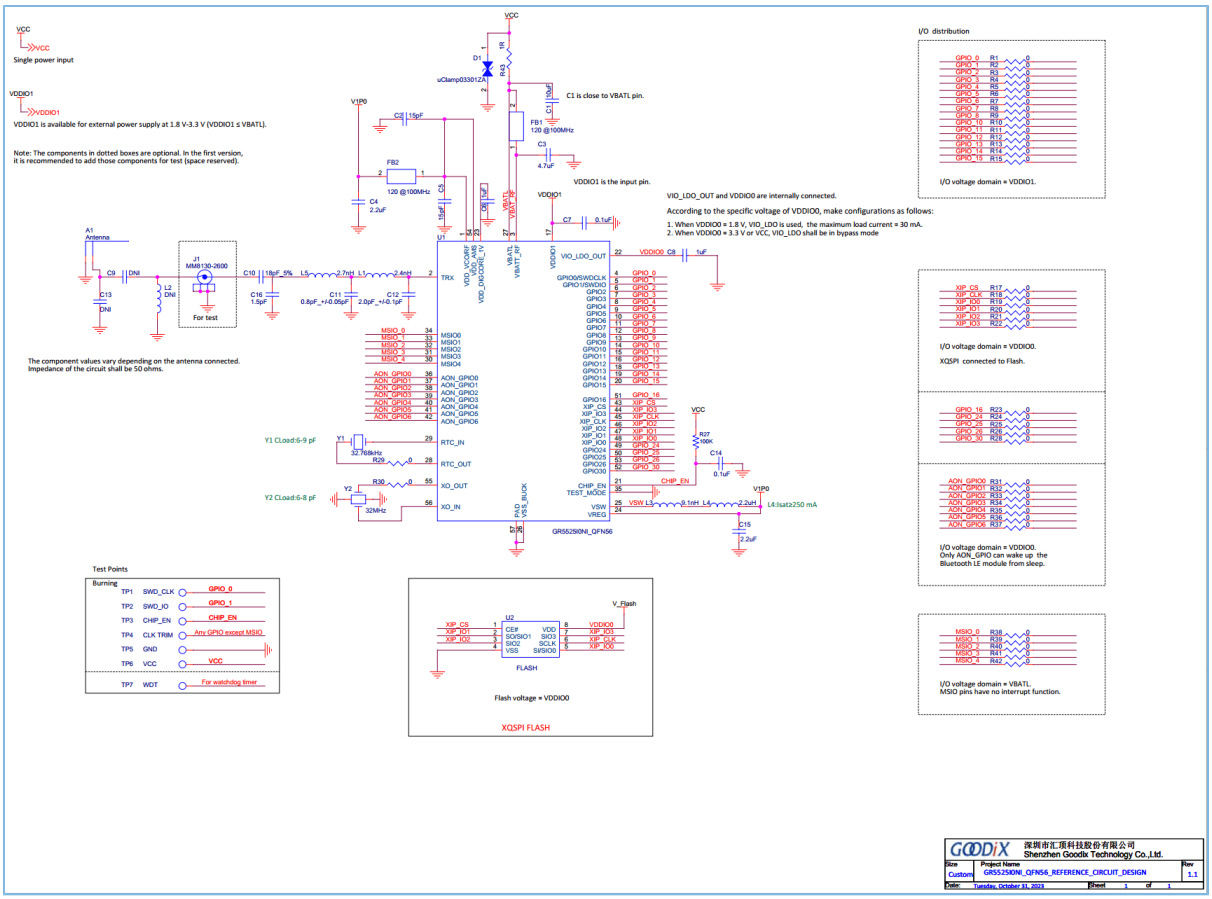

Figure 4-4 Reference schematic for GR5525I0NI QFN56 package

4.2 PCB Layout Reference Design

In accordance with rules specified in "Section 3.2 PCB Design and Layout Guideline", this section provides two reference designs for PCB layout for the GR5525 minimal system by taking SoCs mounting QFN56 package as examples, to help users quickly get started with product development and design.

4.2.1 Four-layer PCBs

In this reference design, all GPIO signals are available as output. The 0.6 mm PCB is composed of four layers with plated through holes (PTHs). The RF route is 22 mil wide, which is the same with the component pad. To ensure the impedance of the RF route is not higher than 50 Ω, provide openings on the second layer, and use the third layer (PCB layer stackup: 0.6 mm, impedance: up to 50 Ω, as shown in Figure 4-5) as the reference plane.

Copyright © 2024 Shenzhen Goodix Technology Co., Ltd.

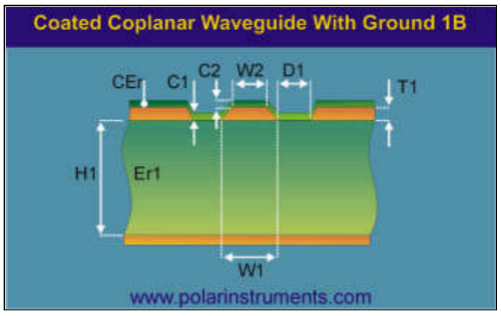

				Tolerance	Minimum	Maximum
Substrate 1 Height	H1	14.6000	+/-	0.0000	14.6000	14.6000
Substrate 1 Dielectric	Er1	4.2000	+/-	0.0000	4.2000	4.2000
Lower Trace Width	W1	22.0000	+/-	0.0000	22.0000	22.0000
Upper Trace Width	W2	21.0000	+/-	0.0000	21.0000	21.0000
Ground Strip Separation	D1	11.0000	+/-	0.0000	11.0000	11.0000
Trace Thickness	T1	1.2000	+/-	0.0000	1.2000	1.2000
Coating Above Substrate	C1	1.0000	+/-	0.0000	1.0000	1.0000
Coating Above Trace	C2	1.0000	+/-	0.0000	1.0000	1.0000
Coating Dielectric	CEr	4.2000	+/-	0.0000	4.2000	4.2000
Impedance	Zo	50.33		------	50.33	50.33
Delay (ps/in)	D	148.357		------	148.357	148.357
Inductance (nH/in)	L	7.466		------	7.466	7.466
Capacitance (pF/in)	C	2.948		------	2.948	2.948

Figure 4-5 Impedance control details for the 4-layer PCB (QFN56)

Details for the PCB layout reference design are provided below.

1. Top layer

   This layer is used for component layout and routing of key signals such as RF.

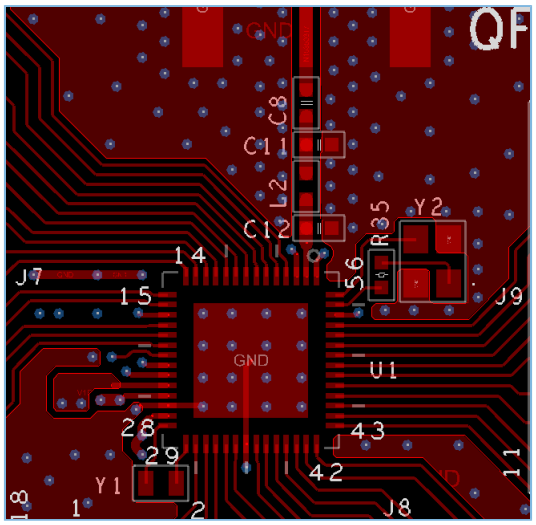

Figure 4-6 Top layer design for 4-layer PCB (QFN56)

2. Layer 2

This is the ground layer for returned signals. In the reference design, an opening is provided on Layer 2 underneath the 50 Ω RF transmission line, and another two openings are provided underneath the signal output pads of the 32 MHz crystal to reduce parasitic capacitance. Layer 3 acts as the reference ground where openings are provided on Layer 2.

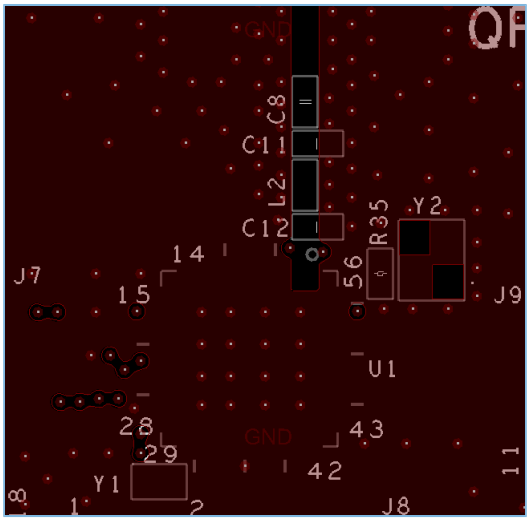

Figure 4-7 Layer 2 design for 4-layer PCB (QFN56)

3. Layer 3

This layer is used for the power and a small number of routes. In the reference design, Layer 3 is used as the reference ground layer for the RF transmission line, and therefore the part underneath the RF transmission line shall be complete.

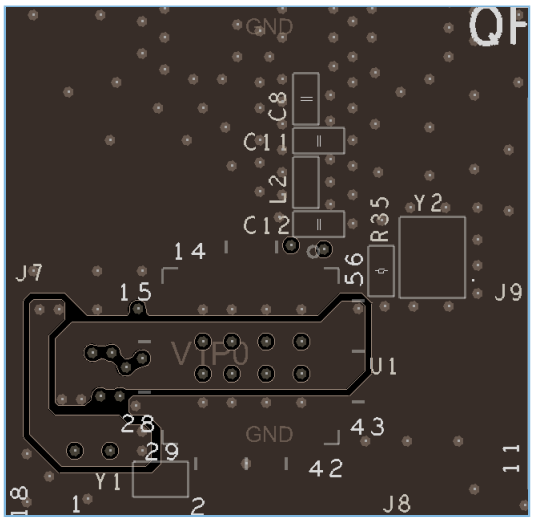

Figure 4-8 Layer 3 design for 4-layer PCB (QFN56)

4. Bottom layer

This layer is used for filter components layout and signal routing. Filter components should be as close to the corresponding IC pins as possible.

Copyright © 2024 Shenzhen Goodix Technology Co., Ltd.

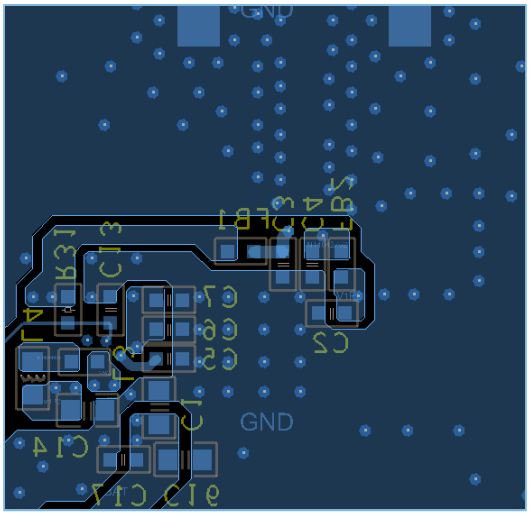

Figure 4-9 Bottom layer design for 4-layer PCB (QFN56)

4.2.2 Two-layer PCBs

To reduce costs, users can design two-layer PCBs. In such case, due to the absence of a ground layer between the two layers, special attention should be paid to the two-layer PCB layout, especially for applications requiring high performance in ESD protection and radiation compliance. Strictly follow the PCB design rules in "Section 3.2 PCB Design and Layout Guideline". Most importantly, make sure power filter capacitors are placed close to power pins, and connection to the GND return path should be enhanced.

Details for the PCB layout reference design are provided below.

1. Try to place components and routing on the top layer only (as shown in Figure 4-10, the top layer is used for component layout and routing of key signals such as RF), so that the bottom layer can be as complete as possible.

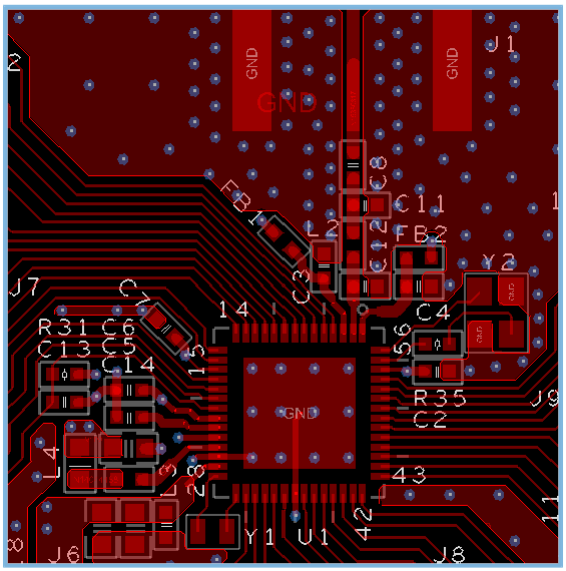

Figure 4-10 Top layer design for 2-layer PCB

2. The figure below is a reference design for power and GND routing. The GND vias circled in yellow are used for return paths of power and RF signals, and shall be connected to the heat dissipation pad with short, wide traces through copper pour areas on the bottom layer (indicated by the green arrows in Figure 4-11).

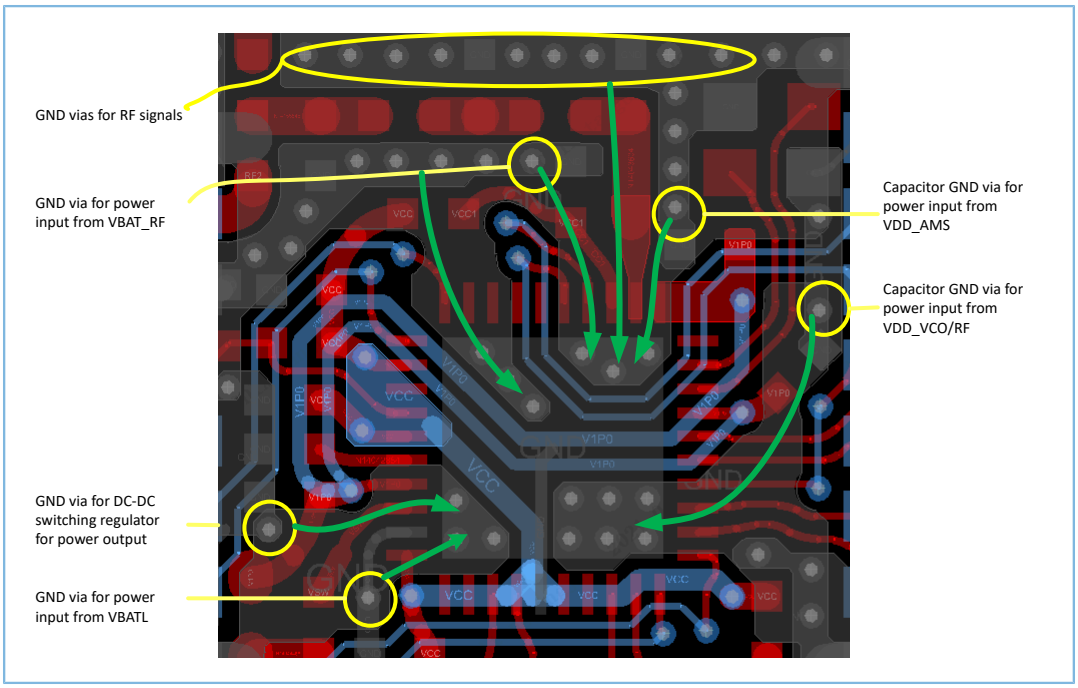

Figure 4-11 Power and GND routing reference design for 2-layer PCB

4.2.3 External Flash Connection for GR5525I0NI

GR5525I0NI uses external QSPI Flash with clock frequency up to 64 MHz. To avoid crosstalk from other signals, the Flash should be placed as close to the IC as possible to minimize the QSPI traces. QSPI traces should be in equal length, with the tolerance within 50 mil.

Figure 4-12 is a reference design for the PCB layout of GR5525I0NI.

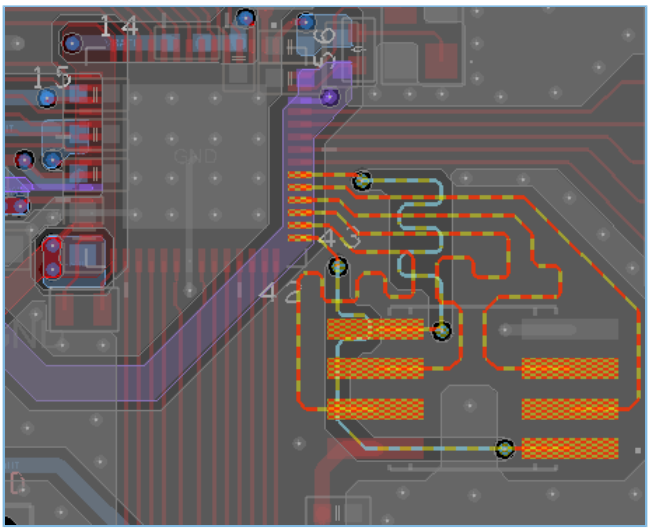

Figure 4-12 Reference design for GR5525I0NI PCB layout

Copyright © 2024 Shenzhen Goodix Technology Co., Ltd.

5 FAQ

5.1 Why Is the Power Consumption in GR5525 Sleep Modes High?

- Description

  In power consumption tests, the power consumption of GR5525 when in sleep mode varies depending on different I/O pin configurations. How to properly configure I/O pins before GR5525 goes to sleep?

- Issue Analysis

  The power consumption of GR5525 in sleep mode is high, and it may be because I/O pins are not properly configured.

  - I/O pins are at floating state.
  - I/O pins are configured in improper pull-up or pull-down state.

  Above incorrect configurations can cause system leakage, so you need to properly configure the state of I/Os before GR5525 enters sleep mode.

- Solution

  Configure the state of I/O pins before GR5525 enters sleep mode.

  - If an I/O pin is in pull-up/pull-down state or used as a driver output, it needs no pull-up/pull-down configuration.
  - If an I/O pin is not used or works in input mode without pull-up or pull-down, it needs to be configured to internal pull-down.

5.2 Can the RF Matching Circuits Be Simplified or Removed?

- Description

  In designing a PCB, can I modify the recommended RF matching circuit layout due to limited space?

- Issue Analysis

  GR5525 recommends two matching circuits for RF: a matching circuit close to GR5525 and a matching circuit close to the antenna. Whether these two matching circuits can be simplified or removed needs to be treated differently.

- Solution

  The matching circuit close to GR5525 is used to match GR5525 internal PA and cannot be removed. It cannot be simplified also as its inductance and capacitance values must be kept consistent with the recommended circuit. The impedance of the RF channel from the GR5525 matching network is 50 Ω and compatible with any 2.4 GHz antenna (2400 MHz to 2484 MHz) that supports Bluetooth products.

  The matching circuit close to the antenna end is used to match the antenna, and its circuit can be changed according to the antenna you use. For the matching of the antenna, you can complete simple matching adjustment by the S11 parameter or the Smith chart from the vector network analyzer. However, for matching of

Copyright © 2024 Shenzhen Goodix Technology Co., Ltd.

other indicators (such as antenna gain and directionality), you are recommended to seek help from professional antenna factories.

Copyright © 2024 Shenzhen Goodix Technology Co., Ltd.

6 Glossary

Table 6-1 Glossary

Name	Description
ADC	Analog to Digital Converter
AGC	Automatic Gain Control
AMS	Analog Mix Signal
BB	Baseband
Bluetooth LE	Bluetooth Low Energy
BUCK	Type of DC-DC Converter
DC-DC	DC-to-DC Converter
ESD	Electrostatic Discharge
ESR	Equivalent Series Resistance
Tg	Glass Transition Temperature
GPIO	General-Purpose Input/Output
LDO	Low-dropout
LNA	Low Noise Amplifier
PLL	Phase-Locked Loop
PMU	Power Management Unit
PCB	Printed Circuit Board
PTH	Plated Through Hole
QFN	Quad Flat No-Lead Package
QSPI	Queued Serial Peripheral Interface
RoHS	Restriction of Hazardous Substances Directive
SDK	Software Development Kit
SoC	System-on-Chip
SPI	Serial Peripheral Interface
SVHC	Substance of Very High Concern
SWD	Serial Wire Debug
UART	Universal Asynchronous Receiver/Transmitter

Copyright © 2024 Shenzhen Goodix Technology Co., Ltd.

7 Appendix: QFN Assembly Guideline

The GR5525 SoCs in QFN56 and QFN68 packages are qualified to MSL3 and are RoHS/green compliant. RoHS is the abbreviation of *Restriction of Hazardous Substances Directive*, which puts a limit on the amount of harmful substances in electronic devices, published by European Union in February 2003. MSL3 represents Moisture Sensitivity Level 3 which indicates that a moisture sensitive plastic device, once removed from a dry bag, can be exposed to an environment with a maximum temperature of 30°C and a maximum relative humidity of 60% RH before the solder reflow process.

GR5525 storage conditions:

- Temperature: < 40°C
- Humidity: < 90% RH
- Period: 12 months

After opening the package: go through reflow for board assembly within 48 hours.

- Temperature: < 30°C
- Humidity: < 60% RH
- Stored at: < 10% RH

Both lead-free solder and Sn/Pb solder applications use the same rules for the general PCB design. Only the board surface finish and the board material have to be considered for lead-free application due to the higher reflow temperature and lead-free solder compatibility. A number of factors may have a significant effect on mounting QFN package on the board and the quality of solder joints. Some of these factors include: amount of solder paste coverage in exposed ground/thermal pad region, stencil design for peripheral and thermal pad region, type of vias, board thickness, lead finish on the package, surface finish on the board, type of solder paste, and reflow temperature profile.

Note:

It should be emphasized that this is just a guideline to help the user in developing the proper motherboard design and surface mount process. Actual studies as well as development effort may be needed to optimize the process as per users' surface mount practices and requirements.

In order to form reliable solder joints, special attention is needed in designing the motherboard pad pattern and solder paste printing.

Typically, the PCB pad pattern for an existing package is designed based on guidelines developed within a company or by following industry standards such as IPC-SM-782. For the purpose of this document, methodology of Association Connecting Electronics Industries (IPC) is used here for designing PCB pad pattern. However, because of exposed die paddle and the package lands on the bottom side of the package of GR5525, certain constraints are added to IPC's methodology. The pad pattern developed here includes considerations for lead and package tolerances.

Copyright © 2024 Shenzhen Goodix Technology Co., Ltd.

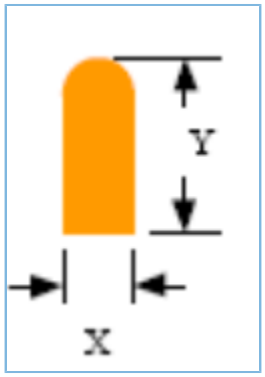

Figure 7-1 Land on the bottom side of the package

For the PCB pad design for GR5525 QFN56 package (7 mm x 7 mm, 0.4 mm pitch), it is recommended to set X = 0.25 mm and Y = 0.75 mm. The pads may also be rounded on the inner edge. Maximum pad width is set to 0.25 mm to avoid solder bridging.

It is recommended to use non-solder-mask defined (NSMD) pads. For 0.4 mm pitch parts with PCB pad width of 0.25 mm, not enough space is available for solder mask web in between the pads in GR5525 QFN56 package. In such cases, it is recommended to use “Trench” type solder mask opening where a big opening is designed around all pads on each side of the package with no solder mask in between the pads, as shown in Figure 7-2.

Note:

The inner edge of the solder mask should be rounded, especially for corner leads to allow for enough solder mask web in the corner area.

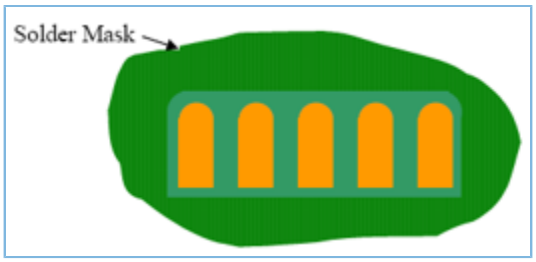

Figure 7-2 Solder mask definition for perimeter lands for 0.4 mm pitch parts

7.1 Package Information

This section provides comprehensive details on mechanical packaging information.

7.1.1 QFN68

The following table illustrates the dimensions of a device in QFN68 package, which is qualified to MSL3.

Table 7-1 QFN68 package information

Parameter	Value	Unit	Tolerance
Package Size	7.0 x 7.0	mm	±0.05 mm

Copyright © 2024 Shenzhen Goodix Technology Co., Ltd.

Parameter	Value	Unit	Tolerance
QFN Pad Count	68		
Total Thickness	0.85	mm	±0.05 mm
QFN Pad Pitch	0.35		
Pad Width	0.15		±0.05 mm
Exposed Pad Size	5.49 x 5.49		±0.1 mm

The figure below shows the QFN68 package outlines.

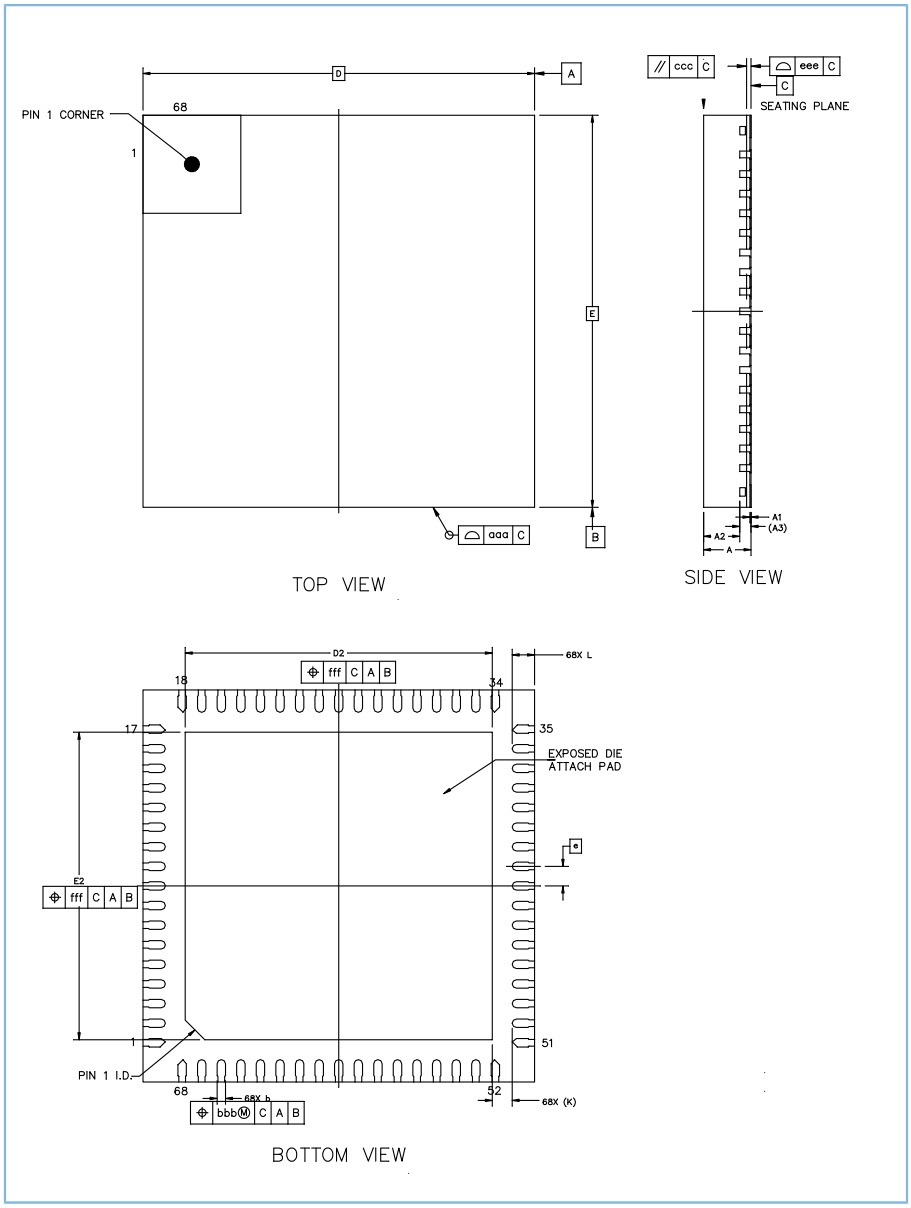

Figure 7-3 QFN68 package outlines

Copyright © 2024 Shenzhen Goodix Technology Co., Ltd.

Note:

Drawing is not to scale.

Table 7-2 QFN68 package dimensions

Symbol	Dimensions in mm			Dimensions in inch		
	MIN.	NOM.	MAX.	MIN.	NOM.	MAX.
A	0.800	0.850	0.900	0.031	0.033	0.035
A1	0.000	0.020	0.050	0.000	0.001	0.002
A2	-	0.650	-	-	0.026	-
A3	0.203 REF.			0.008 REF.		
b	0.100	0.150	0.200	0.004	0.006	0.008
D	7.000 BSC.			0.276 BSC.		
E	7.000 BSC.			0.276 BSC.		
e	0.350 BSC.			0.014 BSC.		
D2	5.390	5.490	5.590	0.212	0.216	0.220
E2	5.390	5.490	5.590	0.212	0.216	0.220
L	0.350	0.400	0.450	0.014	0.016	0.018
K	0.355 REF.			0.014 REF.		
aaa	0.100			0.004		
ccc	0.100			0.004		
eee	0.080			0.003		
bbb	0.070			0.003		
fff	0.100			0.004		

Note:

Values in inches are converted from values in millimeter and rounded to three decimal digits.

7.1.2 QFN56

The following table illustrates the dimensions of a device in QFN56 package, which is qualified to MSL3.

Table 7-3 QFN56 package information

Parameter	Value	Unit	Tolerance
Package Size	7.0 x 7.0	mm	±0.1 mm
QFN Pad Count	56		
Total Thickness	0.75	mm	±0.05 mm
QFN Pad Pitch	0.40		

Copyright © 2024 Shenzhen Goodix Technology Co., Ltd.

Parameter	Value	Unit	Tolerance
Pad Width	0.20		±0.05 mm
Exposed Pad Size	5.2 x 5.2		±0.1 mm

The figure below shows the QFN56 package outlines.

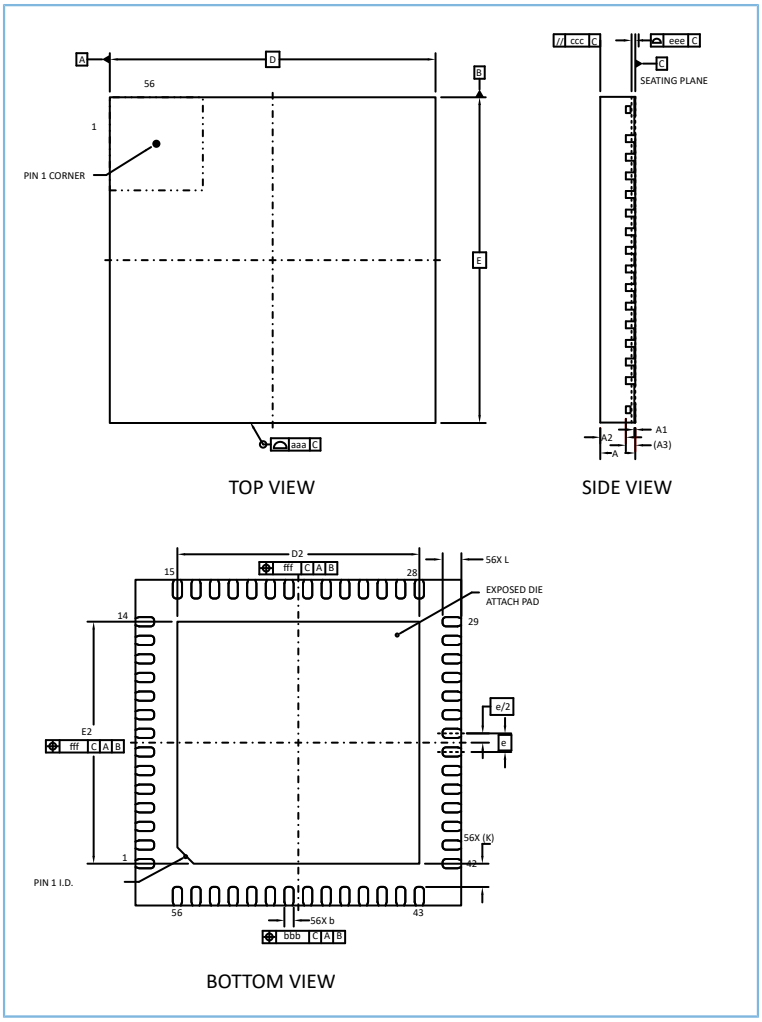

Figure 7-4 QFN56 package outlines

Note:

Drawing is not to scale.

Table 7-4 QFN56 package dimensions

Symbol	Dimensions in mm			Dimensions in inch		
	MIN.	NOM.	MAX.	MIN.	NOM.	MAX.
A	0.700	0.750	0.800	0.028	0.030	0.032
A1	0.000	0.020	0.050	0.000	0.001	0.002

Copyright © 2024 Shenzhen Goodix Technology Co., Ltd.

Symbol	Dimensions in mm			Dimensions in inch		
	MIN.	NOM.	MAX.	MIN.	NOM.	MAX.
A2	-	0.550	-	-	0.022	-
A3	0.203 REF.			0.008 REF.		
b	0.150	0.200	0.250	0.006	0.008	0.010
D	7.000 BSC.			0.276 BSC.		
E	7.000 BSC.			0.276 BSC.		
e	0.400 BSC.			0.016 BSC.		
D2	5.100	5.200	5.300	0.201	0.205	0.209
E2	5.100	5.200	5.300	0.201	0.205	0.209
L	0.300	0.400	0.500	0.012	0.016	0.020
K	0.500 REF.			0.020 REF.		
aaa	0.100			0.004		
ccc	0.100			0.004		
eee	0.080			0.003		
bbb	0.070			0.003		
fff	0.100			0.004		

Note:

Values in inches are converted from values in millimeter and rounded to three decimal digits.

7.2 Board Mounting Guideline

Because of the small lead surface area and the sole reliance on printed solder paste on the PCB surface, care must be taken to form reliable solder joints for QFN package. This is further complicated by the large grounding die pad underneath QFN packages and the proximity to the inner edges of the leads.

Although the pad pattern design suggested above might help in eliminating some of the surface mounting problems, special considerations are needed in stencil design and paste printing for both perimeter and thermal pads. Because surface mount process varies from company to company, careful process development is recommended.

7.2.1 Stencil Design for Perimeter Pads

The optimum and reliable solder joints on the perimeter pads should have about 50 to 75 microns (2 mils to 3 mils) standoff height and good side fillet on the outside. A joint with good standoff height but no or low fillet will have reduced life but may meet application requirement.

The first step in achieving reliable solder joints is the solder paste stencil design for perimeter pads. The stencil aperture opening should be so designed that maximum paste release is achieved. This is typically accomplished by considering the following two ratios:

- Area ratio = area of aperture opening/aperture wall area

Copyright © 2024 Shenzhen Goodix Technology Co., Ltd.

- Aspect ratio = aperture width/stencil thickness

For rectangular aperture openings, as required for GR5525 packages, these ratios are given as:

- Area ratio = LW/2T (L + W)
- Aspect ratio = W/T

L and W are the aperture length and width, and T is stencil thickness. For optimum paste release, the area and aspect ratios should be greater than 0.66 and 1.5 respectively.

It is recommended that the stencil aperture should be 1:1 to PCB pad sizes as both area and aspect ratio targets are easily achieved by this aperture. The stencil should be laser cut and electro polished. The polishing helps in smoothing the stencil walls which results in better paste release.

It is also recommended that the stencil aperture tolerances should be tightly controlled, as these tolerances can effectively reduce the aperture size. It is recommended that smaller multiple openings in stencil should be used instead of one big opening for printing solder paste on the center exposed pad region. See Figure 7-5 for reference solder mask design in the center of the package.

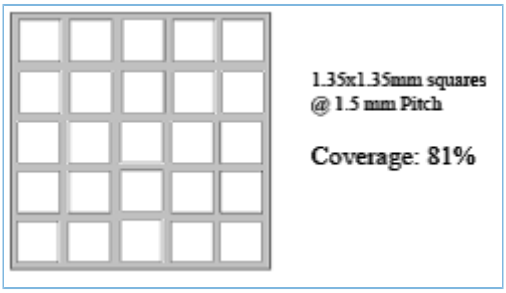

Figure 7-5 Exposed/Ground pad stencil design recommendation for QFN packages

7.2.2 Via Types and Solder Voiding

Voids within solder joints under the exposed grounding pad can have an adverse effect on high-speed and RF applications. Voids within this ground plane can increase the current path of the circuit.

The maximum size for a void should be less than the via pitch within the plane. This recommendation would assure that any one via would not be rendered ineffectual based on any one void increasing the current path beyond the distance to the next available via.

7.2.2.1 Stencil Thickness and Solder Paste

The stencil thickness of 0.125 mm is recommended for 0.4 mm pitch parts. A laser-cut, stainless steel stencil is recommended with electro-polished trapezoidal walls to improve the paste release. Because not enough space is available underneath the part after reflow, it is recommended that “No Clean”, Type 3 paste (IPC standard J-STD-005) be used for mounting QFN packages. Nitrogen purge is also recommended during reflow.

The most common surface finishes that are compatible with lead-free surface mount technology (SMT) process are:

- Organic solderability preservatives (OSP)
- Electroless nickel/Immersion gold (ENIG)

Copyright © 2024 Shenzhen Goodix Technology Co., Ltd.

- Immersion silver
- Immersion gold

Selection of a suitable finish will depend on end users' requirements for board design, assembly process, handling/ storage, and cost.

7.2.2.2 PCB Materials

Due to the higher reflow temperature requirement of the lead-free material set, the board material with higher glass transition temperature Tg (> 170°C) is recommended.

7.2.3 SMT Printing Process

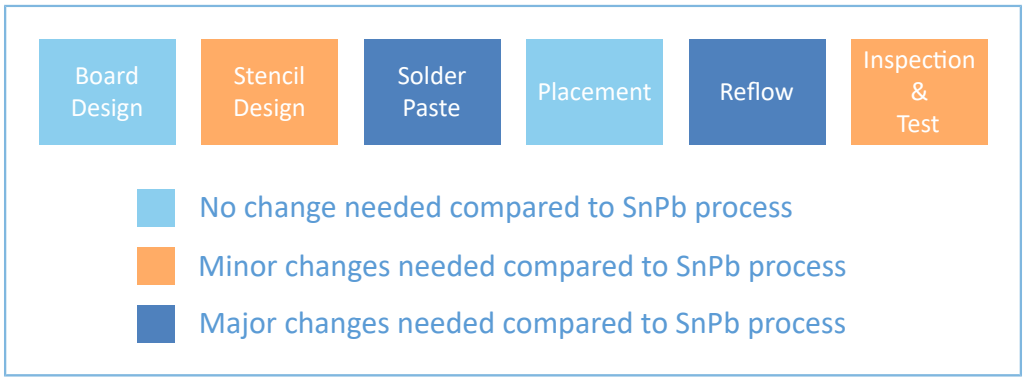

Figure 7-6 SMT printing process

- Solder Paste

  Sn-Ag-Cu eutectic solder with melting temperature of 217°C is most commonly used for lead-free solder reflow application. This alloy is widely accepted in the semiconductor industry due to its low cost, relatively low melting temperature, and good thermal fatigue resistance.

- Stencil Design

  The recommended stencil is laser-cut, stainless-steel type with thickness of 5 to 7 mils and approximately a 1:1 ratio of stencil opening to pad dimension. To improve paste release, a positive taper with bottom opening 1 mil larger than the top can be utilized. Sn-Ag-Cu solder does not wet as well as Sn-Pb solder.

- Printing Process

  The printing process requires no significant changes, comparing with that applies Sn/Pb solder. Any guidelines recommended by the paste manufacturers to accommodate paste specific characteristics should be followed. Post-print inspection and paste volume measurement is very critical to ensure good print quality and uniform paste deposition.

- Placement

  With the self-aligning characteristic of the QFN packages during reflow, the placement accuracy is < 30% of the pad width or as long as the solder pads can touch solder paste.

7.3 SMT Reflow Process

Copyright © 2024 Shenzhen Goodix Technology Co., Ltd.

The optimization of the reflow process is the most critical factor to be considered for the lead-free soldering. The development of an optimal profile should take into account the paste characteristics, the size of the board, the density of the components, the mix of the larger and smaller components, and the peak temperature requirements of the components. An optimized reflow process is the key to ensure successful lead-free assembly, high yield and long-term solder joint reliability.

1. Temperature Profiling

   Temperature profiling should be performed for all new board designs by attaching thermocouples at the solder joints of QFN package, on the top surface of the larger components as well as at multiple locations of the boards. This is to ensure that all components are heated to temperature above the minimum reflow temperatures and the smaller components do not exceed maximum temperature limit.

   For larger or sophisticated boards with a large number of components, it is also important to minimize the temperature difference across the board to be less than 10 degree to minimize board warp. Maximum temperature at component body should not exceed the MSL3 qualification specification.

2. Reflow Profile Guideline

   The solder reflow profile should follow the recommendation from paste manufacturers and general standards such as JEDEC/IPC J-STD-20. Figure 7-7 shows the range of temperature profiles of the J-STD-20 specification. The profile parameters and component peak temperature guidelines are listed in Table 7-5.

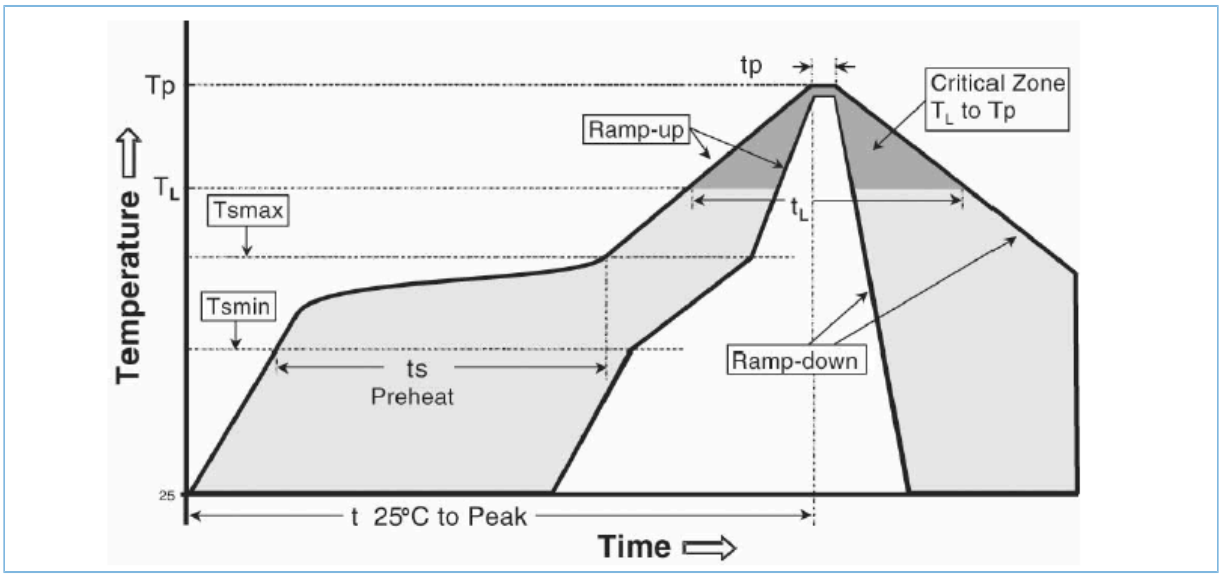

Figure 7-7 JEDEC recommended lead-free reflow profile

The GR5525 fulfills the lead-free soldering requirements from IPC/JEDEC, i.e. reflow soldering with a peak temperature up to 260°C.

The QFN40 lead frame is made of CμAg and has Matte Sn plating. This is 100% Sn and thus Pb-free. Plating thickness is 300 – 600 μin. The Matte Sn CμAg LF can withstand 3x reflow at 260°C.

Copyright © 2024 Shenzhen Goodix Technology Co., Ltd.

Table 7-5 Reflow Profile Parameters

Profile Parameters	Lead-Free Assembly, Convection, IR/Convection
Ramp-up rate (Tsmax to Tp)	3°C/second (max)
Preheat temperature (Tsmin to Tsmax)	150°C – 200°C
Preheat time (ts)	60 seconds – 180 seconds
Time above TB_L, 217°C (T_L)	60 seconds – 150 seconds
Time within 5°C of peak temperature (tp)	20 seconds – 40 seconds
Ramp-down rate	6°C/second (max)
Time 25°C to peak temperature	8 minutes (max)

Note:

All specified temperatures in Table 7-5 refer to the temperatures measured on the top surface of the package.

It is very important to control the peak reflow temperature below the maximum temperatures specified in Table 7-5 to prevent thermal damage to the package. An example of reflow profile is shown in Figure 7-8.

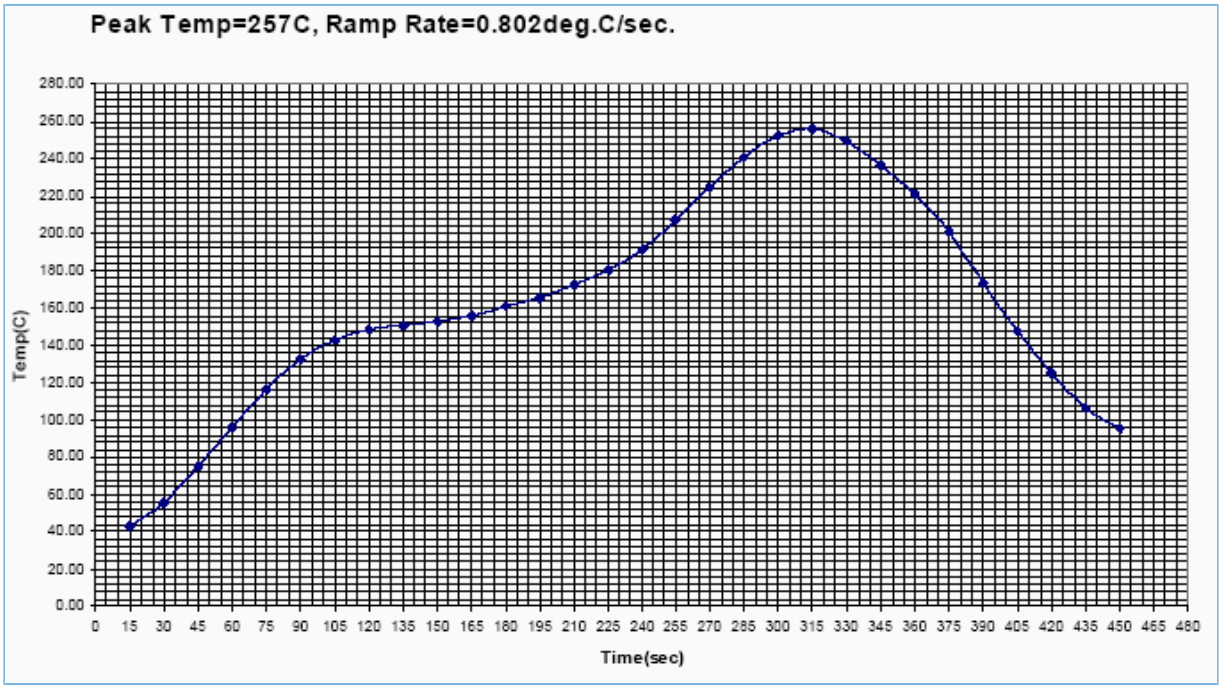

Figure 7-8 Reflow profile example with 257°C peak temperature

3. Reflow Oven

It is strongly recommended that a reflow oven equipped with more heating zones and Nitrogen atmosphere be used for lead-free assembly. An oven with more heating zones offers higher flexibility to optimize the reflow profile for complex and/or larger boards. Nitrogen atmosphere can improve the wet-ability and reduce temperature gradient across the board. It can also enhance the appearance of the solder joints by reducing the effects of oxidation.

Copyright © 2024 Shenzhen Goodix Technology Co., Ltd.

7.4 Rework Guideline

Because solder joints are not fully exposed for QFN package, any retouch is limited to the side fillet. For defects underneath the package, the whole package has to be removed. Rework of QFN package can be a challenge due to their small size.

In most applications, QFN package will be mounted on smaller, thinner, and denser PCBs that introduce further challenges due to handling and heating issues. Because reflow of adjacent parts is not desirable during rework, the proximity of other components may further complicate this process. Because of the product dependent complexities, the following only provides a guideline and a starting point for the development of a successful rework process for QFN packages.

The rework process involves the following steps:

1. Component removal
2. Site redress
3. Solder paste printing
4. Component placement
5. Component attachment

Note:

Prior to any rework, it is strongly recommended that the PCB assembly be baked for at least 4 hours at 125°C to remove any residual moisture from the assembly.

7.4.1 Component Removal

The first step in removal of component is the reflow of solder joints attaching component to the board. Ideally, the reflow profile for part removal should be the same as the one used for part attachment. However, the time above the liquidus state can be reduced as long as the reflow is complete.

Note:

In the removal process, it is recommended that the board should be heated from the bottom side using convective heaters and heated on the top side using hot gas or air.

Special nozzles should be used to direct the heating in the component area and heating of adjacent components should be minimized. Excessive airflow should also be avoided because this may cause chip scale package (CSP) to skew. Air velocity of 15 – 20 liters per minute is a good starting point. Once the joints have reflowed, the Vacuum lift-off should be automatically engaged during the transition from reflow to cool down.

Because of the small size of GR5525 SoCs, the vacuum pressure should be kept below 15 inch of Hg. This will allow the component not to be lifted out if all joints have not been reflowed and avoid the pad lift-off.

7.4.2 Site Redress

After the component has been removed, the site needs to be cleaned properly. It is best to use a combination of a blade-style conductive tool and de-soldering braid. The width of the blade should match to the maximum width of

Copyright © 2024 Shenzhen Goodix Technology Co., Ltd.

the footprint and the blade temperature should be low enough to prevent any damage to the circuit board. Once the residual solder has been removed, the lands should be cleaned with a solvent. The solvent is usually specific to the type of paste used in the original assembly and paste manufacturer's recommendations should be followed.

7.4.3 Solder Paste Printing

Because of their small size and finer pitches, solder paste deposition for QFN packages requires extra care. However, a uniform and precise deposition can be achieved if miniature stencil specific to the component is used. The stencil aperture should be aligned with the pads under 50 to 100x magnification.

The stencil should then be lowered onto the PCB and the paste should be deposited with a small metal squeegee blade. Alternatively, the mini stencil can be used to print paste on the package side. A 125 microns thick stencil with aperture size and shape same as the package land should be used.

In addition, no-clean flux should be used, because small standoff of QFN packages does not leave much room for cleaning.

7.4.4 Component Placement

QFN packages are expected to have superior self-centering ability due to their small mass. As the leads are on the underside of the package, split-beam optical system should be used to align the component on the motherboard. This will form an image of leads overlaid on the mating footprint and aid in proper alignment. The alignment should also be done at 50 to 100x magnification. The placement machine should have the capability of allowing fine adjustments in X, Y, and rotational axes.

7.4.5 Component Attachment

The reflow profile developed during original attachment or removal should be used to attach the new component. Because all reflow profile parameters have already been optimized, using the same profile will eliminate the need for thermocouple feedback and will reduce operator dependencies.

7.5 RoHS Compliant

GR5525 is RoHS compliant, as per directive 2002/95/EC and its subsequent amendments.

7.6 SVHC Materials (REACH)

GR5525 is compliant with Substance of Very High Concern (SVHC) list based on the publication by European Chemicals Agency (ECHA) on October 28, 2008 Regulation (EC) No 1907/2006 concerning *Registration, Evaluation, Authorisation and Restriction of Chemicals (REACH)*.

7.7 Halogen Free

GR5525 is compliant with BS EN 14582: 2007 in regards to halogens: fluorine, chlorine, bromine, and iodine content.

Copyright © 2024 Shenzhen Goodix Technology Co., Ltd.